SILICON CHIP

DECEMBER 2012

$9.30 31/12/12
SILICON CHIP
Top
DEC 12
1212
201081045963 271112 5
NDC 03956
Greensborough Plaza Ne
007-001-004

World's first DIY!

12 DIGIT SUPER HI-RES 10Hz – 2.5GHz+ FREQUENCY COUNTER

PLUG-IN USB POWER MONITOR

Gives a direct readout of any USB device's current, voltage and power

We BUILD A RapMan 3D PRINTER!

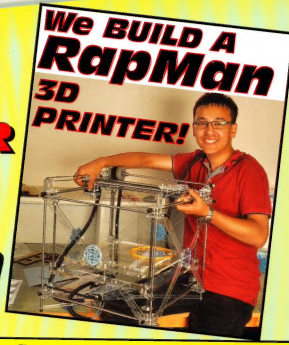

Checking out the latest in SOLDERING

Jaycar Electronics

Better, More Technical

MERRY CHRISTMAS

HAPPY HOLIDAYS

SILICON CHIP MAGAZINE READERS FROM THE JAYCAR TEAM

3 in 1 Stud Detector with LCD Screen

Survey your wall with ease by sliding this handheld detector along the surface. With three modes to sense studs, cables, and metal this handy device allows you to locate and mark items hidden within a wall.

- Requires 9V battery
- Size: 150(H) x 67(W) x 28(D)mm

QP-2283

NEW

$24.95

IP54 Rated 150mm Digital Caliper

Soluble oil, grease, dust and swarf are just some of the hazards measurement tools have to deal with in a workshop. These calipers are IP54 rated to withstand all these nasties.

$39.95

SAVE $10

- Resolution: 0.01mm
- Auto power-off
- Metric and imperial conversion
- Case and battery included

TD-2084 ***was $49.95***

Hard Drive Dock with Cloud Access

Allows you to store and access files on your network or across the Internet using a web browser or Smartphone. Features USB3.0 & Ethernet, media server with UPnP & iTunes® support, network file server, and more. See website for full list of features and setup options.

- Supports 3.5"/2.5" SATA hard drives
- Size: 134(L) x 114(W) x 55(H)mm

XC-4691

NOTE: HDD not included, and requires freely available third-party app for Smartphone support.

$119.00

Rotary Tool Kit with Flexible Shaft

Consists of a powerful 32,000 RPM rotary tool that you can use with numerous (210 piece) attachments in the usual way, plus a 1m long flexible shaft that attaches in seconds to give extra versatility. Suitable for model making, automotive, workshop, art, jewellery or sculpture. See website for full kit contents.

- Power: 135W
- Size: 210(L) x 52(Dia.)mm

TD-2459

$39.95

ATTENTION KIT BUILDERS

Can't find the kit you are looking for? Try the Jaycar Kit Back Catalogue

Our central warehouse keeps a quantity of older and slow-moving kits that can no longer be held in stores. A list of kits can be found on our website. Just search for "kit back catalogue".

Electronics Learning Package for Teenagers

A great gift for a teenager this Christmas. The package includes a handy Soldering Iron Starter Kit (TS-1651), our popular Electronic Dice kit (KJ-8222) and a 148 page, full colour book called Short Circuits II (BJ-8504). The book describes how to build the Electronic Dice project in easy to follow steps, as well as 19 other kits that are available separately. There's also a chapter on how to solder. We've even thrown in a 9V battery (SB-2423) to power the project. See in store or online for more details.

- Suitable for ages 12+ (Adult supervision recommended.)

Total package value $52.85

$34.95

SAVE $11.90

Professional Laser Distance Meter

This comprehensive measurement tool adds, subtracts and calculates area, volume and takes indirect measurements. It stores up to 20 historical records which can be used for area and volume calculations. Battery and case included.

- Range: 0.05 to 50m ±1.5mm
- Min/max distance tracking
- Laser accuracy
- Size: 110(L) x 47(W) x 28(H)mm

QM-1621 ***was $169.00***

$149.00

SAVE $20

PC Programmable Line Tracer Kit

Learn about robotics and programming with this line tracer kit. Run it in line tracer mode by drawing a thick dark line on paper for the robot to follow.

- 2hr assembly time
- Suitable for ages 12+
- Requires 2 x AA batteries
- Size: 120(L) x 64(W) x 55(H)mm

KJ-8906

$34.95

To order call 1800 022 888 Prices valid until 24/12/2012 ***www.jaycar.com.au***

Contents

Vol.25, No.12; December 2012 www.siliconchip.com.au

SILICON CHIP

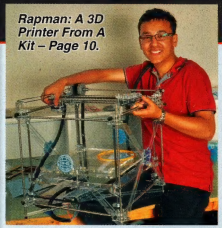

Rapman: A 3D Printer From A Kit – Page 10.

Features

10 RapMan: A 3D Printer That You Build From A Kit
Here's a 3D printer that can produce objects almost 200mm cubed . . . and costs less than $2500. One teensy detail: it comes as a kit and you need to build it before putting it to work – by Ross Tester

16 Soldering: The Game Is Changing
Here's a quick look at where soldering is heading in the future. It's no longer just a case of plugging an iron in and soldering the joint

Projects To Build

24 A 2.5GHz 12-Digit Frequency Counter, Pt.1
High-resolution unit operates up to 2.5GHz, has an accurate internal timebase and also features an external timebase input which can accept 1Hz pulses from a GPS receiver for (almost) atomic clock accuracy – by Jim Rowe

36 USB Power Monitor
Want to know how much power your USB peripherals use? This USB Power Monitor connects in-line with a USB device or hub and can display power consumption, current and the USB voltage – by Nicholas Vinen

48 High-Energy Ignition System For Cars, Pt.2
Second article gives the assembly details for six different versions to suit your car's trigger input, including an ECU/coil tester version – by John Clarke

66 High-Power Class-D Audio Amplifier, Pt.2
Building and testing the amplifier and loudspeaker protection modules plus the connection details for mono, stereo and bridged operation – by John Clarke

80 Modifications For The Induction Motor Speed Controller
The circuit itself is fine but the PCB needs a few modifications to fix a serious interference problem – by Leo Simpson

90 Hacking A Mini Wireless Web Server, Pt.2
Hooking up external sensors and relays and setting it up to automatically send emails of the logged data – by Andrew Snow & Nicholas Vinen

2.5GHz 12-Digit Frequency Counter, Pt.1 – Page 24.

USB Power Monitor – Page 36.

Building The High-Energy Ignition System – Page 48.

External Sensors & Email For The Mini Web Server – Page 90.

Special Columns

44 Circuit Notebook
(1) Digital Thermostat Features Single-Button User Interface; (2) Electronic Canary Needs No Birdseed; (3) PICAXE-Based Roulette Wheel

61 Serviceman's Log
My Mini's blinkers went on the blink

98 Vintage Radio
The Philips Twins – the Australian model 138 & the Dutch BX221-U

Departments

2 Publisher's Letter
4 Mailbag
88 Christmas Showcase
96 Product Showcase
105 Order Form
106 Ask Silicon Chip
111 Market Centre
112 Notes & Errata

SILICON CHIP
www.siliconchip.com.au

Publisher & Editor-in-Chief
Leo Simpson, B.Bus., FAICD

Production Manager
Greg Swain, B.Sc. (Hons.)

Technical Editor
John Clarke, B.E.(Elec.)

Technical Staff
Ross Tester
Jim Rowe, B.A., B.Sc
Nicholas Vinen

Photography
Ross Tester

Reader Services
Ann Morris

Advertising Enquiries
Glyn Smith
Phone (02) 9939 3295
Mobile 0431 792 293
glyn@siliconchip.com.au

Regular Contributors
Brendan Akhurst
Rodney Champness, VK3UG
Kevin Poulter
Stan Swan
Dave Thompson

SILICON CHIP is published 12 times a year by Silicon Chip Publications Pty Ltd. ACN 003 205 490. ABN 49 003 205 490. All material is copyright ©. No part of this publication may be reproduced without the written consent of the publisher.

Printing: Hannanprint, Noble Park, Victoria.

Distribution: Network Distribution Company.

Subscription rates: $97.50 per year in Australia. For overseas rates, see the order form in this issue.

Editorial office:
Unit 1, 234 Harbord Rd,
Brookvale, NSW 2100.
Postal address: PO Box 139,
Collaroy Beach, NSW 2097.
Phone (02) 9939 3295.
Fax (02) 9939 2648.
E-mail: silicon@siliconchip.com.au

ISSN 1030-2662
Recommended and maximum price only.

Publisher's Letter

Smart power meters ain't smart

Recently there has been quite a lot of media comment on the Federal government's plan to rein in power costs for consumers which seem to be rising inexorably at way above the Consumer Price Index. Naturally there have been accusations from one side of politics that it is green power subsidies that are causing the majority of the tariff increases. Meanwhile the green side of politics has retorted that it is caused by the power distribution companies "gold-plating" their systems or that they are over-building merely to cope with power peaks that occur only a few times a year.

First of all, it is undeniable that some of the increases in domestic electricity tariffs have been caused by green power subsidies. The fact that the power companies are legally bound to buy solar and wind power at much higher rates than payable to coal fired power stations is unchallenged. While I regard these measures as a considerable misallocation of resources, ie, from the long-suffering consumers, some people regard it as essential to mitigate the effects of so-called "carbon pollution".

It is also necessary to refute the charge that the energy distribution companies are "gold-plating" their networks, commonly referred to in media parlance as "poles and wires". Such accusations are rubbish. In fact, over the past four or five decades, state governments have seriously run down the grid infrastructure which consists of far more than "poles and wires". We are talking about substations, high-voltage transformers and switch-yards, high-voltage transmission lines and so on. Much of this stuff is very old and often much older than the coal-fired power stations, many of which have been running for more than 40 years. Many suburban substations are more than 60 years old.

Even the power poles and transmission wires in Australian cities are very old and are seldom maintained in any way except to replace poles that are rotten or to repair damage from storms and road accidents. This infrastructure doesn't last forever and so ongoing upgrades are required.

And any suggestion that "smart" power meters might enable consumers to lower their electricity bills is just nonsense. "Smart" meters might be smart for the energy retailers, enabling them to have much more expensive tariffs at times of peak demand but they are certainly not smart for the consumer.

The idea that they are "smart" for the consumer implies that he or she can plan activities during the day to avoid high tariff times and do stuff at night. Great. But wouldn't it be so much "smarter" and equitable if the so-called smart meter had a large display inside the home indicating the tariff and cost of power being consumed at all times? That would be "smart" but that is not part of the plan. No, the plan is to jack up the tariff and if you need to cool your home after a long hot day, then you can simply cop it sweet and pay. Lots.

And we also know what happens when consumers do manage to reduce their consumption of electricity or water or gas, don't we? The companies concerned still manage to increase their overall revenues by jacking up the tariffs even further and also the daily tariff charges.

No wonder some people are looking to install their own self-contained solar power systems so that they can disconnect from the grid. The rising tariffs make such moves economical and they also have the advantage that when there is a system blackout, you still have power.

I guess that might even make the greens happy. Power to the people!

Leo Simpson

mouser.com
Distributing semiconductors and electronic components for design engineers.

Authorized Distributor

The Next Big Thing Is Here.

NEWEST PRODUCTS

The NEWLY redesigned Product Knowledge Center.

More Product Knowledge
More New Products
More Technologies

au.mouser.com/new

The Newest Products for Your Newest Designs®

Active Components
+61 (2) 9893-9400 (New South Wales)
+61 (3) 9775-4778 (Victoria)
+64 (9) 443-9500 (Auckland)
+64 (3) 355-4545 (Christchurch)
+64 (4) 915-9500 (Wellington)
mouser@activecomponents.com
www.activecomponents.com

X-ON Electronic Services
+61 (7) 3394-4490 (Brisbane)
+61 (3) 9574-9044 (Melbourne)
+61 (8) 9358-9358 (Perth)
+61 (2) 9748-7622 (Sydney)
mouser@x-on.com.au
www.x-on.com.au

MOUSER ELECTRONICS®
a tti company

Mouser and Mouser Electronics are registered trademarks of Mouser Electronics, Inc. Other products, logos, and company names mentioned herein, may be trademarks of their respective owners.

MAILBAG

Letters and emails should contain complete name, address and daytime phone number. Letters to the Editor are submitted on the condition that Silicon Chip Publications Pty Ltd may edit and has the right to reproduce in electronic form and communicate these letters. This also applies to submissions to "Ask SILICON CHIP" and "Circuit Notebook".

Diesel engines in the HAARP facility

Regarding the recent article on the HAARP facility for ionospheric research, (SILICON CHIP, October 2012), readers may be interested to know more about the engines pictured in the power-house photo on page 27. The engines shown are EMD 710-cubic inch per cylinder V20 2-stroke diesels. These engines are common in V16 and V12 versions in Australia in locomotives, as well as the V20 version in power plants.

As such, they are longer stroke versions of the EMD 645 (also used in Australian locomotives) which in turn was a bigger bore version of the original EMD 567 engine which powered the first Australian locomotives built by Clyde Engineering under licence from General Motors in the US in the early 1950s. Rated speed is 900 RPM. Early engines used Roots-type blowers to supply air to the cylinders but now turbochargers are used.

The original EMD 567 was designed for freight locomotive work at General Motors in the mid 1930s by a team led by Charles Kettering, the inventor of the starter motor and the conventional ignition system. A notable feature of all three versions of these engines was the use of lightweight plate steel to fabricate and fully weld the sump, crankcase and cylinder block. All engines are 2-stroke, with the exhaust gases exiting via four exhaust valves in the head. Fresh air is admitted into the cylinder via ports in the cylinder liner, when the piston is near bottom dead centre, to completely clear the cylinder of exhaust gases and when the exhaust valves shut, force in extra air.

They also combined the injector and pump into one compact unit operated from the overhead camshaft. The cylinder liners are cast with an integral water jacket connecting to an internal water manifold.

Charles Kettering's company Delco was acquired by General Motors in 1920. EMD was originally Electromotive Corporation and along with the Winton Engine Company was acquired by GM in 1930 and was then known as the Electro-Motive Division of GM. EMD was sold by GM in 2005 to a private equity company who revitalised the company. It is now owned by Caterpillar and is known as Electro-Motive Diesel.

For more information, readers can Google EMD 567, GM diesel, Charles Kettering etc.

Andrew Fraser,
Para Hills, SA.

Sacrificial anode story in the nick of time

Many thanks for the article on hot water system sacrificial anodes in the November 2012 issue. It gave me a timely reminder to change mine. We have a small 40-litre HWS under a benchtop and I changed the anode back in 2006. This time the anode was completely corroded away.

When I bought a new one last time, I found the cost for a full length (1.5m or so) anode was less then the price of a short one to suit my little system. So I bought the long one and cut it down to suit. The offcut was then put into service in my recent anode change and I have enough left for the next change in five or so years time.

Keith Gooley,
One Tree Hill, SA.

Stainless steel tanks don't need sacrificial anodes

I was glad to see the Publisher's Letter and associated article regarding sacrificial anodes in hot water systems (SILICON CHIP, November 2012). Not only is there general ignorance about the subject but it seems most people just don't even want to know when presented with the facts. As long as hot water issues forth, all is good. It is such a sad waste to see new water heaters being installed, knowing the sacrificial anodes will never be checked.

Australia's BEST VALUE Test Equipment

Agilent DMMs from **$98.95***

Wide-Screen DSOs with USB and Digital Filter, from **$329.00***

Bench Power Supplies 30V, 5A from **$87.95***

4-in-1 Test Station with PSU, Counter, DMM, Function Generator from **$874.50***

*Prices above include GST. Freight Extra. Callers welcome at our Castle Hill, NSW store. Stock subject to prior sale. Phone for availability

SPECIAL OFFER!
Mention SILICON CHIP when placing any order over $200 and get a FREE set of Test Leads worth $24.95 +gst!
OFFER OPEN UNTIL 31 DEC 2012

TRIO SmartCal gives you the best value-for-money in test equipment.
Visit our website
www.triosmartcal.com.au
and grab a bargain. Or call **1300 853 407** now!

Sydney Melbourne Adelaide Brisbane

TRIO Smartcal

Incidentally, I wonder how long it will be before someone from the Nanny State chimes in about the legalities of home-owners doing their own plumbing, as a result of your article.

One statement I would like to clarify is that, "all storage hot-water systems, whether they be electric, gas-fired, solar or heat pump, use a steel tank which is lined with a vitreous coating". Not only is there stainless steel but low-pressure copper types are available and some of the old Rheem Coppermatics (copper lined steel) are still functioning, as are the now out of vogue gravity-fed systems mounted in the roof space. None of these require sacrificial anodes.

The glass-lined mains pressure system seems to be a largely Australian and North American trend, whereas gravity-fed copper tanks or mains pressure heat exchangers used with same are common elsewhere.

Unscrewing the sacrificial anode can require a bit more force than depicted by the short handled socket spanner shown in your illustrations. When checking a friend's hot-water tank, I had to slip a length of steel water pipe over the end of an automotive torque wrench to get the leverage. The threads had partly rusted in position.

Back in 1996, when my 30+ year old Cusilman bronze water heater finally had too many pin holes to braze up, I had a good look around at what was available for replacement. Water heaters were no longer available made from this material and neither were copper-lined steel tanks, which had also given similar lengths of service. Most manufacturers were now pushing their glass-lined steel tanks.

Warning about 3-phase motor connections

I have nearly finished constructing the Induction Motor Speed Control from a kit; a well executed kit so far. However, the kit contained an extension cord to be cut and used for the input from the 230VAC mains, with the other end to be used instead of a single-phase power point to connect to a single-phase motor. All of this is quite appropriate and the safety issues have been properly addressed in this case.

However, I would warn fellow constructors NOT to attempt to use the 3-core cable provided to connect to a 3-phase motor. The earth wire must never be used as an active conductor, not even for a brief test. The correct cable is a 4-wire flex, with 3-phase coloured conductors for the motor terminals and a green/green yellow earth conductor which must be connected to the motor frame (a terminal is usually provided in or adjacent to the motor cable entry box).

If an electrician is used to provide this connection, make sure it is done this way. Personally I do not think that connecting a 240V 3-phase motor is any more hazardous than a single-phase one, provided you know what you are doing, take the relevant precautions and incorporate the appropriate facilities such as proper earthing.

Arthur Davies,
Ainslie, ACT.

ONLINE & IN STOCK

MEANWELL DC-DC CONVERTERS

> 0.5W to 300W supplies
> Module, Half-Brick, On-Board, PCB and Enclosed Type models available
> 2 to 3 years warranty

MEANWELL AC-DC OPEN FRAME SWITCHING POWER SUPPLY

> 5W to 300W supplies
> Single, Dual, Triple and Quad supply models available
> Encapsulated and On-Board models available

ONLINE & IN STOCK

PLACE AN ORDER:
FREE CALL **1800 MEANWELL** (1800 632 693)
WWW.POWER-SUPPLIES-AUSTRALIA.COM.AU
VISA AND MASTERCARD ACCEPTED

PowerSuppliesAustralia
YOUR ONE STOP MEANWELL ONLINE POWER SUPPLY SHOP

Mailbag: continued

Comments on Nissan Leaf acceleration

Further to my previous comments about your Nissan Leaf review, perhaps the reason your tester got the false impression that the car could accelerate quite quickly is that it is designed with the electronic "trick" of Power and Eco modes.

In Power mode, the accelerator is very responsive. Small depressions of the pedal give you almost full power. There's very little more but you assume there must be. In Eco you are subtly discouraged from accelerating hard and using up the limited battery capacity quickly by it being the other way around, by having to press the pedal almost all the way to get any more than light acceleration.

In both modes, the power output available by pressing the accelerator all the way is the same, 80kW; it's only the pedal depression to power output curve that's different.

In fairness to electric cars, they are better able to be both fast and economical, as demonstrated by the extremely quick accelerating Tesla Roadster on a recent Solar Challenge; also achieving an almost petrol-car-like 500km range by driving very slowly on a flat outback road. Petrol engines are much less efficient at part throttle than full throttle. So if you put a powerful enough one in a car to get very good acceleration it will spend most of its time in its much less efficient part throttle operating mode.

To get great fuel consumption most of the time you have to sacrifice the ability to get high acceleration and high speed. But electric motors can be efficient right across the power range. So you can get high acceleration and energy-efficient low-speed operation in the same car, as the Tesla proved, by putting in a more powerful motor and power electronics.

Gordon Drennan,
Burton, SA.

To me it seemed absurd to buy a tank that, let's face it, would start corroding from day one. Not only can the glass not be applied everywhere (eg, plumbing connections) but the thermal cycling and constant pressure changes would cause the inflexible coating to crack. Relying on something else in the tank (sacrificial anode) to counteract this seemed dubious, plus the by-products of the anode being present in the water.

Rather than follow the sheep and buy this kind because it's "what everybody installs" and is the cheapest and most readily available, I continued looking and found one manufacturer making theirs from stainless steel. Needless to say, that's what I bought. I remember while in the showroom of the plumbing supplier, waiting for my new stainless steel unit to be wheeled out, there was a cutaway of a glass lined hot-water tank which I eagerly examined. I could see I had made the right choice.

16 years later, the inside of this tank is still as shiny as the day I bought it. To further increase tank life, I also installed a 350kpa (50psi) pressure reducing valve; this being the lowest I could get. Soon after, I switched over the cold supply to the rainwater tank which is of even lower pressure (20psi). The reticulated water mains, in comparison, seems to be unnecessarily high in pressure and can only be detrimental to the water heaters connected directly to them.

In 2007 I went one step further with my water heater, purchasing a kit of evacuated tubes and a circulating pump off eBay, to convert the whole thing to solar. The drop in electricity consumption was nothing short of dramatic (admittedly it was on the continuous tariff) and I could never go back to an electric-only heater. Apart from the low and intermittent power consumption of the circulating pump (which I could run off solar anyway), my hot water is now largely free of cost.

With careful use of hot water it is seldom necessary to use the electric element, even in winter. And when it does require electric boosting, only 40 minutes will easily bring up the temperature for a day's use. With regards to the ill-thought-out and eventual ban on replacing failed off-peak water heaters, it would seem that one could simply replace a failed unit with a tank meant for a split system solar heater, not connecting anything to the solar collector ports, but just using the electric element in the normal way.

Finally, one other way to prolong the life of a glass-lined water heater is to run it at the lowest acceptable temperature; the default of 70°C is ridiculously high for a domestic environment. Indeed, one of SILICON CHIP's earliest articles was on this subject.

John Hunter,
Hazlebrook, NSW.

The passing of Neville Thiele

I have been an electronic nut ever since I learnt to use op amp equivalent circuits to model mechanical systems as part of my civil engineering degree in the early 1970s. I found out about Neville Thiele and the Thiele-Small speaker parameters soon after, when I started to dabble in equivalent circuits for loudspeakers.

I would like to make a comment about the importance of the work of Neville Thiele and Richard Small in the world of loudspeaker design and how significant his passing really is.

In the early 1960s, Neville Thiele and Richard Small (who were both at Sydney University) published in the *Australian Journal of Audio Engineering* a series of papers about loudspeakers in vented boxes. These papers expanded on and refined the work of others (in particular Beranek and Benson) to produce a series of equivalent circuits and standardised parameters for the sizing of the circuit components. It was pioneering, ground-breaking stuff!

These standardised parameters became universally accepted loudspeaker industry standards for speaker performance measurement. They are now known as the Thiele-Small parameters and their papers became the foundation of all that has followed in the design of loudspeakers and the development of speaker-equivalent circuits. I cannot overstate the importance of these people and their work to the loudspeaker industry, worldwide. I don't think anyone can say their work is not in some way, based on the work of Thiele and Small.

A while ago I was reading "Introduction to Electroacoustics and Audio Amplifier Design" by W. Marshall Leach, Jr (who is also, unfortunately, no longer with us). Regarded as a bible of speaker box design, it details advanced circuit design and parameter measurement techniques and is an essential reference for anyone seeking to design and build loudspeaker boxes. And it's all based on the work of Thiele and Small!

So, with Neville Thiele's passing, we should mourn the loss of one of the greats, a founding father of modern electro-acoustics (amongst other things); an Australian, who led the world through tremendous advances in loudspeaker design and whose work will live on in the parameters and circuits he developed.

Corrections to pump timer circuit

Thank you for publishing my circuit "Adjustable Float Switch Triggered Timer" in the October 2012 issue. However, whoever processed the article, made some invalid changes. First of all, the statement "It could also turn on a pump or other 12V DC load up to about 10A" is wrong, since the 1N5819 diode (D1) has a maximum limit of 1A.

Secondly, you specified a 7809 voltage regulator rather than a 7808, so it is debatable whether it will work properly with a nominal 12V supply that's a bit on the low side. This is because of the voltage drop across D1 and because a 78xx voltage regulator needs up to 2.2V between input and output.

Len Cox,
Forest Hill, Vic.

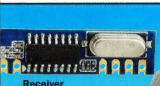

DORJI
Applied Technologies
Australian Distributor

Dorji 433MHz Wireless Modules

These pre-assembled ASK encoded 433MHz wireless transmitter/receiver modules feature 10dBm TX output and -107dBm RX sensitivity with a data transfer rate of 100bps to 9.6kbps.

Dorji 433MHz Data Transceiver Modules

These powerful little transceiver modules feature a 13dBm TX output with up to -118 dBm RX sensitivity, GFSK encoding, and are fitted with a gold plated SMA antenna socket. The power output, channel frequency and data rate (2.4kbps to 9.6kbps) are user configurable.

To view over 10,000 products, pricing and to buy now online, visit
www.wiltronics.com.au
Ph: (03) 5334 2513 | Email: sales@wiltronics.com.au

WILTRONICS
38 Years Quality Service

Mailbag: continued

Blast from the past with a 15-inch loudspeaker

In 1978, my father bought a pair of Technics SB-4500 10-inch 2-way speakers, which I still have in near new condition. I would like to find a pair of larger models from the same series, also in near new condition, preferably the 4-way SB-7070, maybe the 3-way SB-7000 or even the big SB-10000 (pictured).

I well remember an article on the SB-10000, saying that no amplifier was available to drive them at their rated power but that the biggest available one did the job well. There was also something about a recording of Maurice Durufle's Requiem being used to test the low-end response, using the 32-foot pipes from the organ I assume.

The idea of finding and contacting one of the people who were senior executives at Matsushita importer Hagemeyer in the late 1970s occurred to me. I'm guessing that some of the guys from the audio industry around that time kept in contact and very likely have (or had) collections of such things that they or their next generations may wish to sell at some point. Would any reader have any contacts in Australia who could help with this?

Laurie Williams,
Heathpool, SA.

Comment: those Technics systems were from the heyday of Japanese hifi manufacturing which sadly seems to be a fond memory. Those 15-inch systems certainly had physical presence as well as being able to produce deep bass. They make today's systems look wimpish.

I marvel at the loudspeaker equivalent circuits each time I look at them and I am vicariously proud of my fellow Australian's role in bringing these things to the world. I never met him but I am sad at his passing.

Michael Messner,
Pennant Hills, NSW.

AWA centenary will be in 2013

I have a correction to the letter entitled "AWA Centenary In 2013" (Silicon Chip, November 2012, Mailbag, page 10). Clearly, the event will occur on Sunday 28 July 2013 (not 1913 as in my original letter). Furthermore, the organising committee has agreed to a reduced entry charge for attendees not wishing to partake of the catered meal. For more details contact **awaveterans@gmail.com**

Ross Stell,
AWA Veterans Association,
Kogarah, NSW.

Power savings in pool pumps

I have been following your discussions and articles about speed controllers for pool pumps. The latest one, a letter from Geoff Coppa in the Mailbag section of the November 2012 issue, shows some power measurements and calculated running costs. For a rough but workable estimation of flow-rate and therefore the power requirements of a centrifugal water-pump at a different RPM, take the ratio of the new RPM over the old RPM, square the result and multiply by the old power input or flow-rate to find the new or expected power input or flow-rate.

Geoff had set his speed controller at 70% of rated speed, therefore his power input is around 50% of rated and his flow-rate will be around 50% of rated. As I have said, this is a fairly rough estimation and will only be valid if the new pump parameters values are still well within the normal

working specifications of the pump system. For example, if you were to double the RPM of the pump above the normal working RPM, then the working head would probably be much larger, mainly due to friction losses in a pipe system not designed for such flow-rates, and the pump capacity would not increase any where near four-fold as predicted.

Also, if you decrease the pump RPM much below 70%, the static head which the pump could overcome will drop much faster than predicted, compounding the reduction in flow-rate. So Geoff's calculations are correct but probably irrelevant. There is a saving in electricity consumption because the pump is doing less work, ie, the pump is only circulating about half the amount of water through the system per day, including the filter(s), as the flow-rate is half what it was while the hours of operation are the same.

Why not let the pump run at the full-rated RPM for half the time to achieve the same total flow per day without the expense of extra equipment and the reduction in efficiency (output over input expressed as a percentage) of the system due to the insertion of another energy transfer/conversion loss into the system?

Some examples of the extra losses are the speed controller itself which probably would be around 90-95% efficient (therefore around 5-10% of input energy would be lost to the system mostly as heat or noise); the loss of efficiency of the electric motor now no longer operating within the optimum parameters it was designed for (2880RPM for a 2-pole motor with an AC power input being a clean sinewave at 50Hz); and the loss of efficiency of the water pump itself as it also would probably be designed for an optimal rotational speed of around 2500-3000RPM.

Either way, you would be saving roughly about the same in electricity consumption but may not be allowing enough total flow per day to keep the pool water "clean" with either option. Also there is the consideration that components like the filtering tanks, chlorinator or pool cleaner probably operate most efficiently and/or effectively at a flow-rate within a specified narrow range.

The people that are successful at designing and marketing these pump systems should know a thing or two about creating a product which does the job successfully at the lowest possible cost. Therefore, if the system works most efficiently at a certain flow-rate and a certain-sized combination of pump and motor is the most cost effective means of obtaining that flow-rate, why would they oversize the components, increasing initial costs and running costs while decreasing cost effectiveness?

Then why should we add components that throttle back its capability and again curtail its effectiveness? I'm sure a ½HP or ¾HP pump unit would be cheaper to produce than a 1HP one and would be installed as original equipment if it was just as effective and cheaper to operate. I am not an expert on pool pumps but I have a good understanding of common physical properties, inefficiencies and effectiveness of fluid systems.

Trevor Krause,
Gympie, Qld. SC

Construction by Jashank Jeremy
Words and Photos by Ross Tester

A 3D Printer that you first build . . .

RapMan

We've looked at a few 3D printers in the past but they've all had two major drawbacks as far as the average punter is concerned: object size and price! Here's a 3D printer that can produce objects almost 200mm cubed . . . and you can buy for well under $2500. One teensy drawback of its own: before you create your first 3D masterpiece, you need to build it – the printer, that is!

Many work experience kids get the raw end of the stick – while they experience "work" it's more often than not the menial tasks, the drudge work that all businesses and companies rely on to keep going, like filing and posting – but many kids find boring.

As such many go back to school disillusioned with what they might expect when they actually leave school and start work: what, no $200,000 a year job complete with expense account and company Porsche?

Jashank Jeremy, a year 10 student from Manly Selective Campus (almost across the road from the SILICON CHIP office) was the exception to the norm. His luck was in when he came to SILICON CHIP for work experience: he was asked to build a 3D printer that was sent in for review.

Build a printer? No kidding – you start with a (big!) box of bits and end up with a printer!

And not just ANY printer, either. We'd been sent in a Bits-from-Bytes "RapMan" 3D printer by the Australian distributors, Benson Machines.

So for most of the week Jashank was here, he was beavering away at putting the machine together.

It was no reflection on him that he didn't quite finish it to see it in action – he had to go back to school! Even if you're used to putting together this type of equipment or are heavily into robotics, etc, you can expect to spend a good 30-40 hours building one of these, or even more if you're not experienced.

But more on the actual build shortly.

By the way, the finished printer may not look exactly like the printers you're used to. It doesn't come in the traditional grey or bone case – it's actually open-frame construction so you can see right inside the machine as the 3D printed image builds up in the centre. (See the sidebar, "How does 3D printing work?").

The "manual"

The instructions to build the RapMan are something else again – it's hard to describe just how good they are!

Like the vast majority of equipment these days, there is no printed manual supplied with the RapMan 3D. However, there is a manual provided on CD (in fact, several manuals), with more

information downloadable if you want it from the RapMan website (www.rapman.com.au).

Of course you *could* print it all out if you want to but if you do so, you'll miss out on one of the major reasons for viewing the manual on-line – it deserves special mention because it really is special!

Each step of construction is very nicely illustrated but you won't find a lot of text to read through. In fact, you won't find much text at all.

You won't need it because the vast majority of illustrations are themselves in *animated* 3D.

When you load the page of interest, the components you need (including the appropriate nuts and bolts, etc) are laid out for you for easy identification.

But wait, there's more . . .

Click on the image and the components start "assembling" themselves, showing you exactly where each bit needs to go.

You start with this rather large box of very-well-packaged bits and end up with a 3D printer! Don't be tempted to willy-nilly break bits out: the instructions tell you which component you need and when.

How does 3D printing work?

We're all used to printers that work in two axes – the print head moves across the paper in the X axis laying down ink where it is told to. When it reaches the end of the line, the paper advances up a little (the Y axis) so that a complete image is built up on the page line-by-line.

Up to a point, 3D printers do much the same thing – although they don't use ink as such, they use some form of plastic material which is extruded from the print head. In the case of the RapMan, that's normally either ABS or PLA and this is applied significantly thicker than the ink in a normal printer.

The plastic is heated to a liquid state and relies on a fan to cool, and therefore solidify, the material.

What makes the 3D printer so different is that a third axis is introduced – the Z axis.

Once a single-layer image is produced, the now-hardened image is moved down by its thickness and a new image, or layer, is printed directly on top of the previous one.

The process repeats over and over so that (eventually!) a 3D image is produced.

If you can imagine using a hot-melt glue gun with a fine nozzle to draw a circle, wait until it hardens, then draw another circle on top of the first, etc, etc, you'd end up with a cylinder built up of layers. That's a rough approximation of the process.

While this is the way the RapMan and similar 3D low-cost printers work; other (high end) printers lay down a thin film of special powder and then harden or "sinter" the required portions via the print head and repeat this, building up the layers. At the end of the print the non-hardened powder is brushed or blown away, leaving the hardened 3D image.

The advantage of this method is that moving parts within the 3D print can actually move once the powder is removed.

The latest RapMan can achieve a similar result by using two heads, one applying a softer (soluble) material which is relatively easy to remove from the wanted (hardened) model.

These five diagrams are actually screen shots taken from the superb assembly animation. Not only do they show you what goes where, as you "use up" the nuts and screws they disappear from the screen – if you have a screw short or over, it becomes very obvious that you have done something wrong!

And here's the really kinky bit. Even while the image is assembling on screen, you can twist and turn the image around to see what is happening on the back, the bottom, the top – in fact anywhere.

Want to look at the illustration from the opposite side? Click on it and twist it around! Want to turn it upside down? Click on it and flip it – to whatever angle you want. Want it enlarged a bit? Easy. It's not just a selection of angles or sizes, it's all angles and all sizes, totally controllable by you and your mouse. And you can repeat this as many times as you like just in case you don't understand something.

Oh, if only life had been this easy when I built that model of the RMS "Titanic" all those years ago! (Yes, it was marginally before home computers were invented . . .).

What you get

Basically, for your two and a half grand you get a large cardboard box containing all the bits you'll need to build the printer. That also includes the software to drive it (on the same CD as the manuals).

It is very well packaged – in fact, the whole presentation is very professional, with lots of assistance in identifying the various components – even the nuts and bolts are clearly marked in individual packs so that when you need a "Xmm long type Y bolt and screw" you don't have to flounder around for ages.

The vast majority of the RapMan kit is built from various laser-cut shapes and sizes of acrylic parts, all attached to quite large carrier sheets (which are discarded on completion).

If you remember building plastic scale models of ships and planes, with the various components stamped out on large carrier sheets for you to remove or "break out" as you built the model, that's not unlike how most of the "plastic" bits are supplied for the RapMan printer. Of course, the bits are somewhat more substantial than were those hulls, decks and funnels of the Titanic!

A word of warning here: don't jump in willy-nilly and break out all the bits. They're a lot easier to keep together – and identify – if they're still attached to the carrier. Break them out only as you need them. All the bits are numbered so it's quite easy to work out which bit goes with which.

Along with the acrylic bits, there's a reasonable amount of metal hardware supplied – the basic frame of the printer as well as the guides, worm drives and so on. Much of this is stainless steel so rusting shouldn't be a major issue.

The motors, which drive the print head in the X and Y direction and raise and lower the base plate (Z direction) are also metal – but you might be somewhat surprised to find that the gears themselves are plastic. Surely this means that as they wear the printer will not be as accurate as when new? Apparently not – the worm drive system means that the wear and tear on the gears is minimised and accuracy is maintained.

Before you start

You're going to need to refer to the construction manuals – often – so it will pay you to have a laptop/notebook computer within easy, close viewing so that you can easily refer to it. At the least, you'll need a computer monitor and mouse/keyboard.

And you'll need quite a bit of work space to put the RapMan together. The finished item will be around 600mm square but we suggest you'll want another couple of hundred mm around this to work with.

And that's not taking into account the large (610 x 410 x 170mm) box all the bits come in, which will also need to be close at hand.

The workspace needs to be solid, flat and level (perhaps check it with a spirit level first?) and when some of the intricate bits are being assembled, you need good lighting.

Did I hear someone suggest the kitchen table? Good idea – but remember that it's going to take you at least a full weekend to put together (and

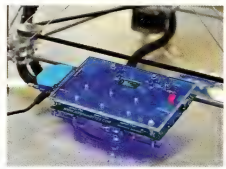

Various stages during assembly: left and centre, Jeshank has completed the eight corner supports and has started fitting the stainless steel frame components. He's actually moved off the bench and onto the floor to give him a bit more room! On the right is the mostly pre-assembled electronics module fitted and working.

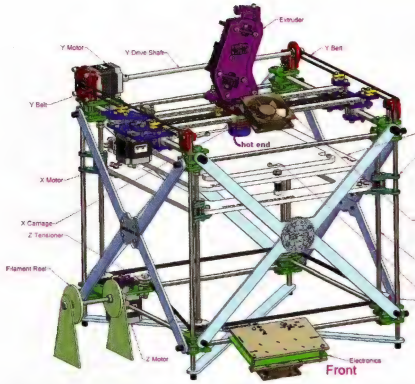

Here's what the finished printer will look like, with the major components labelled (no, your printer won't be in pretty colours!) You'll need to devote quite a bit of time – at least 30-40 hours – to complete the build.

probably quite a bit longer) so if you can convince the family to forego meals for that long, good luck!

Putting it together

It really is quite simple to construct, given the outstanding assembly instructions which we mentioned before. And as we also mentioned, if you don't quite understand how any of the bits go together, you can twist and turn the image on screen at will.

You'll start by assembling the eight corner clamps which basically hold the whole thing together. The first one will take quite a while but once you've done one, the rest fall into line pretty easily. You'll then move on the frame – the stainless steel rods we were talking about before. The whole thing feels pretty flimsy at this stage but once tightened up properly and the cross-braces fitted, it starts to feel much more rigid.

It's as easy as XYZ!

As a 3D printer, this not only has an X and Y axis, it also has a Z. The Z axis is actually the platform on which the printing occurs. First of all, a printed "raft" is laid down, then the print is built up on that. When finished, the object, with raft, is removed from the platform by inserting a thin flexible blade under the base – the whole lot comes off and then the raft is easily removed.

The X and Y axes use belt drives from stepper motors and captive linear ball bearings running on 12mm solid stainless steel rods. Overall the action is very smooth and precise. The Z axis relies on four threaded steel rods on which the platen is raised and lowered. Again, the action is very nice.

The extruder

One area we've seen a lot of (negative!) comment on the 'net is in the construction of extruders. It seems this is the one area where many users get into real difficulty.

No such worries with the RapMan – it comes with this section prebuilt, ready to bolt into place. And the instructions to do this, once again, are superb.

The extruder feeds the print medium at the right speed in the right place, not unlike an inkjet print head. But where the inkjet ink is measured in microns, the extruded plastic is quite a bit thicker – up to 0.5mm.

The electronics

Like the extruder, the electronics/controller is supplied pre-built and tested. There are a lot of wires to con-

What does it print with?

The material used by the Rapman is 3mm diameter and is unwound from a spool by the print head as it is needed. By far the most common are PLA and ABS. From what we have read there are pluses and minuses for both but it would appear that PLA is best for the beginner/occasional printer.

PLA

PLA (polylactic acid) is probably the easiest material to work with when you first start printing. PLA is a biodegradable thermoplastic that has been derived from renewable resources such as corn starch and sugar cane. This makes PLA environmentally friendly and very safe to work with.

PLA also has a very sharp glass transition point so if you use a fan to cool it, on printing it will set to solid very quickly. This has the advantage of achieving a greater range of geometries than are possible with other plastics. It also reduces the thermal stress on the printed part – warping becomes less of an issue in larger parts.

Solid PLA is available in white, black, blue, purple, yellow and green colours. It does not require any curing or post-production treatment. However, should you wish to, PLA can be sanded and coated with automotive spray filler. PLA can also be painted over with acrylic paint.

ABS

ABS (acrylonitrile butadiene styrene) is considered to be the second easiest material to work with when you start 3D printing. It is an engineering polymer commonly used to produce car bumpers due to its toughness and strength. It's also the stuff that Lego blocks are made of...tough enough but safe enough for the kids to handle!

ABS is suitable to make light, rigid, moulded products with good shock absorbance and wear resistance. It is available in white, black, red, blue, yellow and green colours and has a matte appearance.

However, consideration must be made when printing larger objects – thermal stress can cause ABS to warp as the part cools.

Other materials

Other materials available for use with the RapMan (some for very specialised applications) include: High density polyethylene (HDPE), low density polyethylene (LDPE), polypropylene (PP), unplasticised polyvinylchloride (UPVC) and polycaprolactone (PCL).

nect but again, the instructions make it relatively simple. About the only criticism I had here was the size of the display panel. The digits are uber-tiny (my guess is about 2 point type!). That might be fine for young, 20:20 eyes but old eyes like mine required a magnifying glass.

The firmware required to drive the printer is also pre-loaded. It's open source so there should be no future problems with updates or revisions.

Finishing it off

You need to follow a detailed procedure to make sure everything is tensioned/located/setup properly but if you do this in a methodical way, you should be rewarded with a first-time-successful printer when you connect power (a 12V plugpack, supplied) and turn it on.

This includes threading the printing medium (PLA or ABS – see panel) – and it really is like a thread, supplied on reels which unwind as the medium is used. There are some pretty kinky colours available, including glow-in-the-dark types!

When turned on, fans whirr, LEDs glow, the display appears and the print head goes through a self-test to ensure that it is in the correct position to accept printing commands from the software.

Printing

If everything proves satisfactory when you turn it on, there are a few test "prints" supplied with the manuals which you can try. It's simply a matter of loading one of these onto an SD card and allowing the printer's software to find it, then tell it to print. It really is that easy.

Or you could download one of the myriad of STL-format files from the 'net – there's some rather amazing stuff out there. Just one warning here: a couple we tried didn't print properly – no fault of the printer, the files themselves were corrupted.

Of course, many users will want to build 3D objects using their own files. No problem: you simply draw a 3D model file with virtually any CAD package and save it as a stereo lithography (STL) file. This is then converted to a g-code to produce the layers which will be printed.

Be warned, though: printing large and/or intricate objects will take a long time – many hours in some cases. Even simple objects may take an hour or more. So if you're in a hurry, you're going to be out of luck.

The software

All file preparation is done on your PC – but you don't need the PC attached to the RapMan to print. The ready-to-go file is transferred to the printer via an SD card.

The PC software is called "Axon 2". Upon loading it, you are presented with a 3D representation of the print area. You can then load an STL file containing the 3D model you wish to print and place it on the platform. You can also move, rotate and scale it.

Clicking the "Build" button then presents you with a range of options. You can set the layer thickness (and thus print resolution) to either 1/8mm, 1/4mm or 1/2mm. The trade-off is that with lower resolution, you get faster printing.

Another option is whether to print any "support material" under overhangs, to prevent them warping – depending on the angle of the overhang and the type of plastic you are printing with, this may be necessary.

If you get the multi-head RapMan 3D printer then you can use a different type of plastic for the support material than for the printed object, making it easier to remove.

You can also change the fill density and pattern – normally, solid volumes of the printed object are not completely filled with plastic but rather have a cross-hatch or hexagonal pattern which gives them most of the strength of solid plastic without the weight or cost. The density is usually 20% but can be changed between 0% (hollow object) and 100% (completely solid).

It's also possible to change the print speed ratio. However, if you crank the speed up too high, the print quality could degrade.

Once you have made the selections and click OK, the software then crunches for a while and finally displays what the printed object will look like, including the raft and any support material. You can examine it layer-by-layer and once you are happy, save it to a file which can then be placed on an SD card, ready for the printer.

(By the way, one nice thing about the RapMan is that you can easily remove the print platform – just loosen a few bolts – good if you need to remove a large printed object from it).

How big an "image"?

Maximum printed size is approximately 200 x 200 x 170mm (w x d x h). This mightn't sound all that big but for a printer of this type, it's quite impressive. Maximum speed (depending on

Scanning and 3D Printing

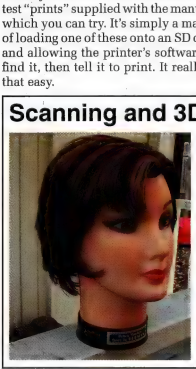

Another intriguing example we found on the 'net' but this is a little different: intead of using a drawing, this uses a photograph and converted to a 3D image via software.

The original is shown on the left, the 3D print on the right.

This opens up a whole new realm of possibilities!

If you'd like to know more about how this was done, have a look at http://cubifyfans.blogspot.com/2012/05/from-point-shoot-camera-to-cube-printer.html

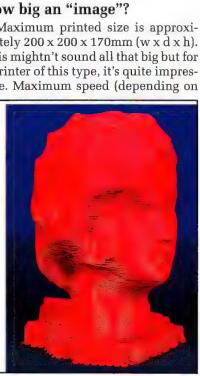

Again, a 3D print we found on the net – just imagine an architect or designer being able to say "here's what your new building will look like" and hand the client a scale model!

the print head) is 15mm^3/second.

The most recent model (RapMan 3.2) can handle more than one print head which also opens up the possibility of multi-colour printing, as well as handling soluble support material, so complex shapes are made easier to build.

Conclusion

As you can probably tell, we're rather impressed with this rather ingenious printer.

At the price, it's probably (though not definitely!) outside the budget of many hobbyists. That's not to say that mechanically inclined hobbyists wouldn't get a real thrill out of first building and then using the RapMan. What a Christmas present! But its most obvious market is in education – it's ideal for schools, colleges and the like to not only demonstrate 3D printing but by building the printer first, students gain an excellent understanding of the hows and whys.

We've even heard of colleges who have purchased a couple of these – and when each batch of students graduates, they disassemble them ready for the next lot to build and use.

It's also perfect for engineering and prototyping shops where they need to know if tab A really can fit into slot B – and then not just show clients a picture of what their new thingamijig will look like but give them one to actually hold in their hands!

Another application we thought of (of course, there are many we haven't!) is for the production of "bits" which may no longer be available – a specific knob or control part on a vintage radio, needed to match existing parts, for example. ABS is pretty tough stuff and, given the right software, the Rapman could produce a part probably as durable as the original. SC

Where from, how much?

Our RapMan 3.2 came from Benson Machines, 118 Carnarvon St, Silverwater NSW 2128 (Freephone 1800 68 78 98).
Website for more information: www.rap-man.com.au
Recommended retail price (single head) is $2099.00 + GST.

3D printing that's out of this world!

An agile white vehicle roams the desert, manoeuvring the unforgiving terrain as the wind and sun beat down and temperatures swing from one extreme to another. NASA astronauts and engineers are test-driving a rover over rocks and sand, up and down hills in an environment that simulates the brutal conditions of Mars.

This is Desert RATS (Research and Technology Studies) and the rover — about the size of a Hummer and boasting a pressurised cabin to support humans in space — is being put to the test. It could ultimately serve one of NASA's loftiest goals: human exploration of Mars. In the nearer future, similar vehicles might help humans investigate near-earth asteroids.

The rover is integral to NASA's mission to extend human reach farther into space. Its cabin can accommodate a pair of astronauts for days as they study extraterrestrial surfaces. Its twelve rugged wheels on six axles grapple over irregular, unsure terrain. And its forward-jutting cockpit can tilt down to place its observation bubble low to the ground.

3D printed rover parts

To design such a tenacious and specialised vehicle, NASA engineers drew on ingenuity and advanced technology. For example, about 70 of the parts that make up the rover were built digitally, directly from computer designs, in the heated chamber of a production-grade Stratasys 3D printer. The process, called Fused Deposition Modelling (FDM) Technology, or additive manufacturing, creates complex shapes durable enough for Martian terrain.

When you're building a handful of highly customised vehicles and subjecting them to otherworldly punishment, stock parts and traditional manufacturing methods aren't enough. 3D-printed parts on NASA's rover include flame-retardant vents and housings, camera mounts, large pod doors, a large part that functions as a front bumper, and many custom fixtures. FDM offers the design flexibility and quick turnaround to build tailored housings for complex electronic assemblies. For example, one ear-shaped exterior housing is deep and contorted and would be impossible — or at least prohibitively expensive — to machine.

For its 3D-printed parts, NASA uses ABS, PCABS and polycarbonate materials. FDM, patented by Stratasys, is the only 3D-printing method that supports production-grade thermoplastics, which are lightweight but durable enough for rugged end-use parts.

For more information:
Tasman Machinery Pty Ltd
3/51 Grange Road, Cheltenham, VIC, 3192
Phone: 03 9584 8355 www.tasmanmachinery.com.au

ADVERTISING FEATURE

SOLDERING

The game is changing!

At the recent Electronex show in Sydney, many exhibitors showed the latest in soldering equipment. While mainly for professional/industrial use, we thought readers might like to see just where soldering is heading in the future. It's no longer a case of plugging the iron in and soldering the joint!

Soldering in Australia has changed over the years from being predominantly used in a manufacturing environment to now being used in a fragmented rework/repair industry, changing the requirements for professional soldering equipment.

American car manufacturers GM and Ford came to Australia in the 1920s, beginning a wave of manufacturing. The 1930s saw a large increase in the production of steel.

World War 2 saw an interruption to imports and a switch in demand to domestically produced goods. This drove growth in the local manufacturing industry.

Tariff protection across the 1940s-1950s further aided the local manufacturing industry which hit it its peak in the late 1950s and 1960s.

Soldering equipment was in high demand around this time in Australia. The standard of living was increasing and manufacturing companies like AWA were producing radio and communications equipment, Westinghouse and Hoover were producing household appliances while EMI and AWA were producing television sets for a growing market as the country prospered.

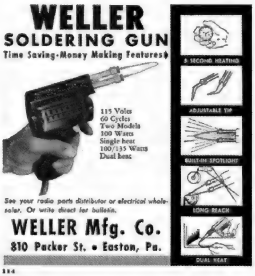

An early Weller soldering gun advert from the USA. These guns were seldom seen in Australia and even then their use is fairly limited; definitely not for fine/close work!

World of Weller

Weller®

240V Soldering

Butane Powered Soldering

Soldering Stations

APEX TOOL GROUP

apextoolgroup.com.au
Sales: 02 6021 6666
alburysales@apextoolgroup.com

ADVERTISING FEATURE

Weller soldering stations were extensively used across the country to support growth.

Japan began trading electronic goods with Australia by the mid 1960s and this began the globalisation of international trade.

Australia entered the resources sector in the 1970s and this put the country on a path of minerals export as the main economic driver. The 1970s saw large increase in wages and high inflation and this further moved the focus away from manufacturing towards imports produced in countries where the labour costs were substantially cheaper.

China's capacity to manufacture and export has increased dramatically over the last 10 years leaving Australia with little manufacturing.

The internet has changed the way we source and purchase products, however warranty and customer service rarely exists in this type of transaction.

Weller, the original inventor of the soldering gun in 1941 has kept pace with the ever changing needs of the market over the years and with its over 50 years of expertise as a company, it has been responsible for much of the innovation we see today in soldering equipment.

Weller caters for every need in soldering from the simplest manually operated irons right up to the highly sophisticated BGA/QFP SMD Repair and Rework System offering component placement with camera aided positioning system.

Weller has many initiatives to ensure a clean and safe work environment including: tip recycling programs, full lead free solder capability across the range of Weller soldering equipment and a full range of fume extraction products.

The range of Weller soldering equipment has evolved over the years to meet the ever changing needs of the markets around the world.

A summary of some of the Weller products available is as follows:

230V Soldering Irons

The range includes a 230V soldering iron for the very smallest to the very largest soldering jobs, with an output range from 15 Watts to 250 Watts.

Portable Butane Gas Operated Soldering Irons

For those situations where a mains power supply is not available, Weller offers a comprehensive range of portable butane powered soldering irons, including the Jumbo Pyropen which can operate for up to 3 hours on a single charge of gas.

Soldering Stations

For general soldering applications for electronics enthusiasts and hobbyists, Weller offers the WES51D analog station and the WESD51DAU digital station.

Rework and Repair Stations

For the rework and repair industry Weller offers an innovative range of soldering stations, including the 3-output WR3000MAU.

Multicore solder – ahead of the game!

For decades Multicore's soldering products have remained at the forefront of soldering technology, with their unique 3 and 5-core solder wires, guaranteeing flux continuity.

Multicore produces a complete range of products covering all electronics soldering applications.

Multicore began development of its line of lead-free products long before the industry at large was talking about the implications of RoHS (Restriction of Hazardous Substances).

Multicore's solder wires are available in a wide range of alloys, diameters, reel sizes and flux types. Combinations include all purpose, low and high melting point, low residue, high activity, water washable and various lead free types.

Unique types such as the patented alu-sol designed for aluminium and stainless steel are also stocked. Flux types include spray, foam, water washable, VOC, no clean and specific fluxes for lead free work.

Multicore's solder pastes are available in leaded and lead free alloys packaged in syringes, jars and pyles cartridges. There are also a large range of miscellaneous products such as desolder wick, peelable masks, flux and cleaning pens and stencil cleaners.

Prime Electronics has been the sole Australian distributor of Multicore products for many years.

In 2003 Prime Electronics was awarded the Australian distributorship for both Multicore and Loctite Electronics products, importing direct from their Asian and UK plants. Backed by industry leading technicians, Prime Electronics with three branches in Qld and NSW also has an extensive network of resellers throughout Australia. A comprehensive range of Multicore products are stocked locally, while customer specific products are readily available.

Want a free sample of Multicore's Crystal 511 No Clean solder wire? Contact Multicore on Brisbane (07) 3252 7466 or Sydney (02) 9704 9000

Upton Australia Webstore is Online!

www.uptonaustralia.com.au

20 YEARS of industry experience!

UPTON AUSTRALIA PTY. LTD.

Smart Soldering & SMT Solutions

- Soldering & Desoldering
- SMT Rework & Repair
- BGA & Area Array Rework
- Fume Extraction
- Precision Cleaning
- Inspection Equipment
- BGA Reball & Stencil Kits
- SMT Assembly Equipment
- Selective Soldering
- Dispensing

PACE METCAL OKi MicroCare Mantis UPTON AUSTRALIA PTY. LTD. speedprint europlacer DDM Novastar DIMA Reball

Popular brands supplied include

PACE worldwide METCAL OKinternational HAKKO Weller JBC

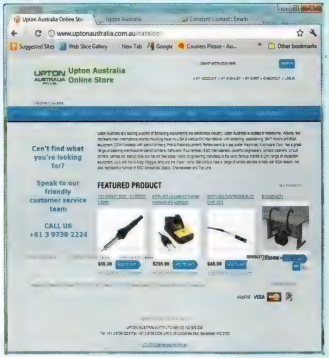

Can't find what you're looking for?

Speak to our friendly customer service team

CALL US: (03) 9738 2224

Upton Australia is a leading supplier of Soldering equipment to the electronics industry. Upton Australia is located in Melbourne, Victoria. We represent many international brands including **Pace Inc USA & Metcal/OK International**, with soldering, desoldering, SMT rework and BGA equipment.

DDM Novastar with stencil printers, Pick & Place equipment, Reflow ovens & Wave solder machines. **Microcare Corp**. has a great range of cleaning chemicals for stencil printers, Defluxers (Flux removal) ESD mat cleaners, powerful degreasers, contact cleaners, circuit chillers, canned air, stencil rolls and flat lint free wipes. **Vision Engineering** manufacture the world famous Mantis & Lynx range of inspection equipment, **Luxo** with the K-Mag Maggie lamp and the Wave II lamp. **StencilQuik** have a range of simple stencils to help with BGA rework.

Upton Australia Pty Ltd (ABN 83 102 829 238) Unit 3, 38 Corporate Blvd, Bayswater Vic 3153
Phone (03) 9738 2224

ADVERTISING FEATURE

Multicore®

Lead & Lead-Free No-Clean Solder Wire

The Crystal. range of fluxes is ideal for all types of hand soldering assembly and rework applications.

Crystal. is a high activity flux with excellent wetting on difficult surfaces while leaving minimal clear residues.

Stocked sizes

60/40 Tin/Lead
0.35, 0.45, 0.56, 0.7, 0.9, 1.2, 1.6, 3.15mm

99C, 97SC (SAC305) & 96SC (SAC387) Lead Free
0.38, 0.56, 0.7, 1.0, 1.2, 1.6mm

We also stock low & high melting point solders, & unique solders like Alu-Sol designed for **aluminium and stainless steel**.

Lead-Free Solder Paste

LF318 97SC is a no clean, halide free solder paste with a wide print process window and extremely long abandon time. Superior slump resistance minimising the risk of bridging and high humidity resistance.

We also stock leaded solder paste in 25g syringes & 500g jars.

Loctite Electronics products also available.

PRIME ELECTRONICS

Prime Electronics is the Australian distributor for Multicore & Loctite Electronics products.

Brisbane Ph: (07) 3252 7466 Fax: (07) 3252 2862
Southport Ph: (07) 5531 2599 Fax: (07) 5571 0543
Sydney Ph: (02) 9704 9000 Fax: (02) 9746 1197

Fast stencils for high-speed SMD PCB assembly

Modern high-speed assembly of electronic circuit boards, using surface-mounted devices (SMDs) requires precision equipment to ensure a perfect result.

This starts with the PCBs being automatically dispensed onto a conveyor at a predetermined spacing. With surface mounted components, the PCB's must then have solder paste "printed" onto the lands (pads) prior to high-speed placement or "loading" of the components onto the board.

The solder paste initially acts like a glue to keep the components in place as the PCB moves down the production line until it reaches an oven. At this point, the solder suspended in the paste melts and all connections are made simultaneously.

Printing the solder paste onto the PCBs is usually performed by a printing machine fitted with a thin stainless steel stencil which is matched to the PCB. The printing itself is similar to silk-screen printing where the solder paste is "squeegeed" through the stencil resulting in the perfect placement of the paste every time.

The actual amount of paste deposited is critical. Too little and the electrical connection may not occur, too much paste can lead to bridging.

Manufacturers have a number of ways to vary the amount of paste including the adjustment of the aperture sizes and the thickness of the stencil shim material. Aperture reductions are normally carried out by the stencil manufacturer according to industry standards but production engineers often have additional requirements to attain the required amount of paste. All these variables point to the benefit of having a local stencil manufacturer.

As a vital part of any electronics assembly line, solder paste stencils are generally ordered well ahead of when they are needed. Sometimes things don't always go to plan though and the manufacturer can be in a situation where they need a new stencil fast.

According to Mastercut Technologies Managing Director, Jim Cove, "it is not unusual for our customers to find themselves needing a new stencil due to a last minute design change, an oversight or discovering damage to an existing stencil". Mastercut have taken on the fast delivery challenge by streamlining the manufacturing process.

Mr Cove says "we aim to reduce lead time be carrying out as much of the stencil manufacture as possible prior to receiving the order. When we receive the customer's data, we can now start cutting much sooner as all the prep work with the frame and shim has been done in advance."

Previously all stencils were cut from stainless shim then mounted into the frame one at a time. Further time was lost just waiting for the epoxy adhesive to cure. "We have modified our stencil laser to allow us to cut the shim after it has been mounted. That means we can have a selection of pre-framed shims ready to go" said Mr Cove. Electronics manufacturing is a highly competitive field and Australian manufacturers need to be at the top of their game to remain strong in the business.

"That includes suppliers down the line like Mastercut and that is why we are constantly looking for efficiencies to allow us to offer great service at a competitive price to our customers. Pre-framing is a good example" said Mr Cove.

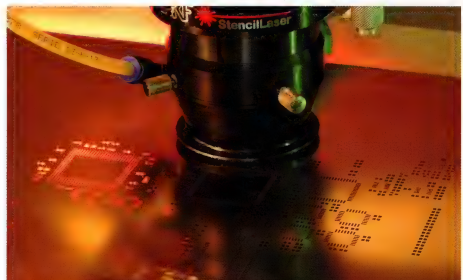

Mastercut's Stencil Laser preparing a solder paste stencil for use in high-speed PCB assembly.

NEW FM206 – 3 in 1 Rework station

Desoldering, Soldering and Micro Hot Air

Features

- Graphic User Interface for easy setup and operation
- 3 simultaneous powered ports
- Self-contained pump for vacuum and air flow
- Digital airflow indicator
- Hot air handpiece ramps up to max temp in less than 20 seconds
- Manual or Automatic profile for hot air
- Low cost composite hot air nozzles
- Optional kits available FM2030-04 Heavy duty Iron, FM2023-04 small tweezer, FM2022-04 Large tweezer.

Packing List

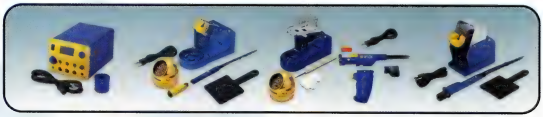

FM206 + FM2027-03 + FM204-44 + FM2029-01

Includes free nozzles and tip

Hot Air nozzle
N4-01

De-soldering nozzle
N1-10

Soldering Tip
T12-D12

It's for you!
HAKKO

Distributed By: **HK Wentworth Pty Ltd**
sales@hkwentworth.com.au
Ph: 02 9938 1566 Fax: 02 9938 1467

ADVERTISING FEATURE

Thermaltronics TMT-9000S-2 with Curie Heat Technology

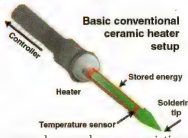

The hand soldering process has changed rapidly over the past ten years; lead-free solders have been introduced and components are getting smaller and smaller. These factors must be put into consideration when looking to upgrade or replace your existing soldering irons

Gone are the days when you adjust the temperature of your conventional ceramic heating soldering iron to the maximum when you come across difficult solder joints as these higher temperatures burn the flux in solder wire before it has a chance to help the flow of solder. This leads to poor solder joint quality and drastic reduction in tip life; the chances of tips oxidising and turning black are high. Times are changing and Curie Heat Technology by Thermaltronics is fast replacing the older conventional resistive heating element.

Curie Heat Technology utilises induction heating to bring the temperature to its Curie Point which is set by the composition of the alloy. Once it hits Curie Point the tip will lose it magnetic properties and idle at its set point ready for action.

A phenomenon known as Skin Effect results in the heat being greatest in the outer layer of the tip (heating from the outside in) as opposed to conventional ceramic heating which is from the inside out. Once the soldering tip makes contact with the solder joint, the tip will transfer heat across at a rapid rate and the solder joint will attempt to draw temperature away from the tip. As the tip temperature starts to fall below its Curie Point temperature it begins to regain its magnetic properties, so the induction heating process resumes and keeps the tip at the stable temperature required.

This one-step process is the main reason why Curie Heat responds faster than conventional technology which uses tip, sensor and ceramic heating element. With the conventional ceramic systems the sensor detects the drop in temperature then increases power to the heating element in order to reheat it. This process causes a poor response time and in frustration, to compensate for the ceramic heater technology, the user will set the idle tip temperature too high which then causes problems stated earlier.

Curie Heat Technology can be used for fine surface mount work and even the finest tips have good heat retaining capabilities and work with the biggest of ground planes where you may have struggled in the past with your existing soldering iron.

Get your hands on the Thermaltronics TMT-9000S-2 13.56MHz soldering system and experience the huge difference in hand soldering between RF Induction, Curie Heat Technology versus basic conventional ceramic heating soldering systems. There's more information at www.thermaltronics.com.au

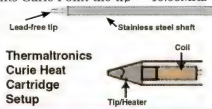

Thermaltronics Curie Heat Cartridge Setup

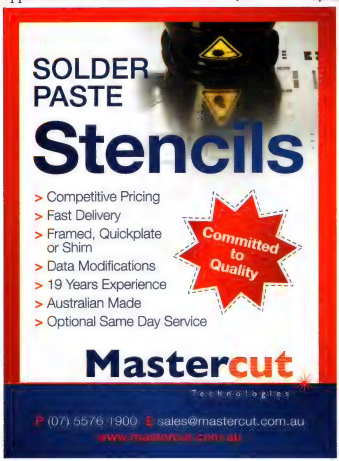

Introducing Soltronico

Soltronico is a new Australian company providing a unique blend of high quality, small volume manufacturing and custom jobs that larger manufacturing plants ignore. Being local, customer service is our top priority.

Some of our jobs so far have included prototyping, small production runs, electronic repair and custom re-design of older equipment.

We know you like electronics, either as a hobby, or in full time occupation, and we can help you. We are open to discuss any need that you have requiring an electronic solution.

Give Jose a call at (02) 4915 1988, or check us at www.soltronico.com.au.

Mektronics Australia Pty Ltd

Professional Tools

Free 600 page catalogue with every order

JBC: Digital Lead-Free Soldering Station (JBC-CD2BB)

Premium Quality

- The CD soldering control unit features large graphic display that shows important information at a glance
- Integrated parameter programming allows the station to store up to 5 temperatures

$399 +GST

Metcal: Soldering & Rework System (MET-MX5010)

The MX-5010 offers users an ergonomic hand-piece for soldering and rework with hundreds of tip geometries to address the widest range of applications.

- Lead-free

$699 +GST

Pace: Digital Rework & Repair System (PAC8007-0455)

The MBT 350 features PACE's IntelliHeat technology and comes standard with the following handpieces:

- TD-100 Soldering Iron
- SX-100 Sodr-X-Tractor
- MT-100 Mini-Tweezer

$1500 +GST

OKi: Precision Tweezer Rework System (OKI-MFR-1140)

- SmartHeat® Technology provides exceptional power for high thermal demand applications
- Comprehensive range of tweezer cartridges
- Hand-pieces are ergonomic for operator safety and comfort

$480 +GST

OKi: PS-900 Soldering System (OKI-PS900)

The PS-900 provides power and exceptional thermal control in a small bench top footprint and provides operators the repeatability to produce high quality solder connections with exceptional speed.

$200 +GST

Hakko: Analogue Soldering Station (HFX-888)

Soldering iron provides 30% increase in workability compared to that of conventional HAKKO 936. Improved thermal conductivity enables the same work to be performed in a shorter time.

$150 +GST

OKi: Hot Air Convection Tool (OKI-HCT900-21)

A low-cost, versatile rework solution for a wide variety of production and rework application challenges. It has a compact, robust design utilizing of analog controls for both airflow and heat.

$399 +GST

Daylight: Ultra Slim Magnifying Lamp (DAYA22020-1)

Combining the largest 17.5cm precision glass lens with a strong, instant-on 28W Daylight energy saving tube (120W equiv.) every intricate detail is needle sharp while eliminating eye strain.

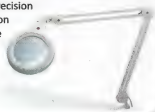

$190 +GST

PanaVise: Junior Vise (PV201)

The amazing mini-vise!

Your work is held gently, but securely, and can be positioned exactly where you want it. The easy-to-use single knob controls head movement through 3-planes: 210° tilt, 360° turn & 360° rotation.

$24 +GST

Panasonic: 2.4V Cordless Drill Driver (EY6220NQ)

- 1 hour charging system
- Easily converts from pistol grip to straight form
- 2 speed gearbox
- 6.5 mm hex drive

$150 +GST

Quality Tools for Industry

Sydney	Melbourne	Adelaide
Unit 3 8 Bonz Place Seven Hills NSW 2147	65-67 William Street Dandenong Sth VIC 3175	95 Harrison Road Dudley Park SA 5008

• Prices in Australian Dollars • Prices quoted exclude GST • Valid to 31 January 2013 or while stocks last • Images are for illustrative purposes only • Tips sold separately •E&OE•

A world first!

Pt.1: By JIM ROWE

A 2.5GHz 12-digit frequency counter with add-on GPS accuracy

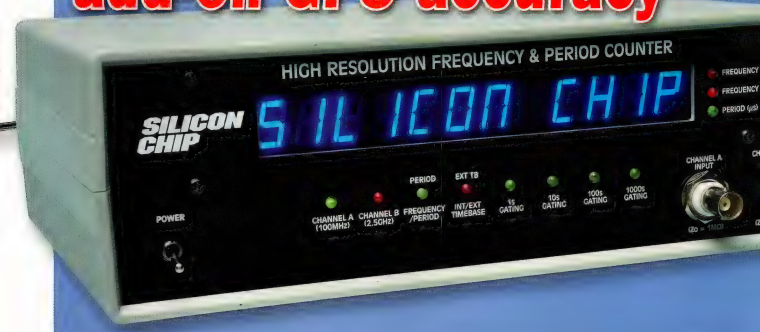

We are very proud of this high-resolution frequency counter which covers a range from below 10Hz to over 2.5GHz. It has an internal timebase (naturally) but also features an external timebase input which can accept 1Hz pulses from a GPS receiver, to achieve measurement accuracy approaching that of an atomic clock! And it doesn't cost a mint to build!

WE HAVE PUBLISHED a few digital frequency counters over the years, the most recent being two versions of a compact 50MHz counter in the October 2003 and February 2007 issues. But they are just toys compared to this new design which allows direct measurement of frequencies up to somewhere between 2.5GHz & 3GHz. This means it can be used to measure most of the frequencies used by WiFi, mobile phones and microwave ovens.

And while high-quality commercial frequency counters often employ a temperature-compensated or oven-controlled crystal timebase, these are not in the race when compared the very high accuracy 1Hz (1pps) signals available from many GPS receivers.

In order to make these more accurate measurements meaningful, you need a high-resolution display, which is why this new design has no less than 12 digits. Oh, by the way, because it will measure period, it can give high-resolution readout of low frequencies as well. Naturally, it uses a microcontroller and this is used in a clever way, to simplify the counting circuitry while still using high-speed logic for dealing with the UHF range up to 2.5GHz and over.

In spite of the high accuracy and

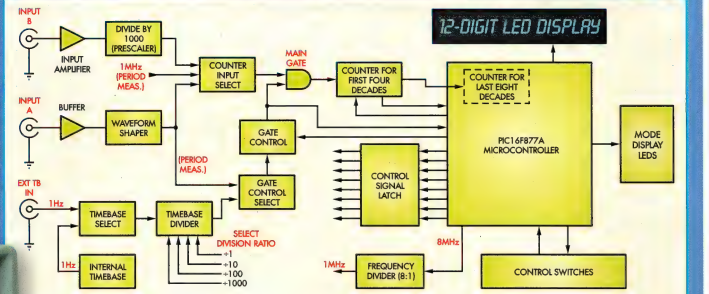

Fig.1: block diagram of the 2.5GHz 12-Digit Frequency Counter. It uses a divide-by-1000 prescaler (to measure the higher frequencies) and a PIC16F877A microcontroller to process various signals and drive the display.

Left: this printed photo of the completed prototype really doesn't do the blue 7-segment LED displays justice – they really are nice and bright. The unit measures frequencies to over 2.5GHz and is also very easy to use.

resolution, this is not a difficult instrument to use. Below the 12-digit display is a row of pushbuttons, each of which has an associated LED to show when it has been pushed. The buttons are used to select one of the inputs, the mode (frequency or period), the timebase (internal or external) and the gating period (from one second to 1000 seconds).

Finally, to the right of the digital display, there are three LEDs to indicate the frequency readout in Hertz or Megahertz, or Period in microseconds.

We will explain all these features and how to use them later on in these articles. Overall though, it's a doddle to use.

The unit is housed in a standard plastic instrument case measuring 256 x 189 x 83mm. All components fit on two PCBs, linked by a short ribbon cable. The smaller PCB mounts behind the case front panel and supports the 12-digit display plus all of its management circuitry and components. The larger PCB sits inside the bottom of the case and supports the rest of the components and circuitry. The complete counter operates from a 9-12V DC plugpack, with a current drain of less than 650mA.

Now let's dive into the technology used in the new design.

Block diagram

Fig.1 shows the block diagram. It's based on a PIC16F877A microcontroller, chosen because of its reasonably large number of I/O ports – five in all, including three 8-bit ports, one 6-bit port and one 3-bit.

The PIC micro performs three important functions. The first is to control the overall operation, in response to the settings of the pushbutton switches on the front panel. The second is to manage the counter's 12-digit display and its associated mode and range display LEDs. Finally, it also performs some of the actual counting.

Counting of the first four "fast" decades is done outside the PIC but counting of the eight slower decades is done inside the PIC itself.

In Fig.1, the PIC is shown on the right with the 12-digit main LED display above it, the mode display LEDs to its right and the control switches below it. Although only single arrows are shown linking the PIC micro to the main LED display and the mode display LEDs, all of these are controlled via a shared multiplexing system.

To the lower left of the PIC is an 8-bit latch which is used to convey the various range and mode control signals to the counter's input and timebase circuitry. Then at upper left of the PIC you can see the counter circuit for the first four decades, fed from the main gate and with its output passing into the PIC as input for the internal 8-decade counter.

Moving right over to the left you can see the circuit blocks for the two main counter inputs, with channel A's input in the centre and channel B's input above it. Note that the channel B input block includes a 1000:1 prescaler, because this is the input channel for higher frequencies (100MHz - 2.5GHz).

At lower left you'll find the internal timebase block, the timebase selection block (internal/external timebase) and the programmable timebase divider.

Ahead of the counter's main gate (at upper centre in Fig.1) is a block labelled Counter Input Select, which is used to select which signal is fed to the counter gate: the input signal from channel A, that from channel B, or a 1MHz signal for period measurements. The 1MHz period measurement signal is actually derived from the PIC's 8MHz clock, via an 8:1 frequency divider (shown at lower centre, below the control signal latch).

The counter's main gate is ena-

Specifications

A digital frequency and period counter capable of making frequency measurements up to at least 2.5GHz and time period measurements to 12 digits of resolution. All circuitry is on two PCBs, linked by a short 20-way IDC ribbon cable. The counter is housed in an instrument case measuring 256 x 189 x 83mm.

Two Frequency Ranges: 10Hz – 100MHz (Channel A input); 100MHz – 2.5GHz or more (Channel B input; typically goes to 2.8GHz)

Period Measurement Range: 1μs - 999,999 seconds (Channel A input); resolution 1μs

Input Sensitivity: <20mV 0-20MHz; <75mV 20-100MHz; <250mV 100MHz+

Input Channel/Mode selection: eight pushbutton switches.

Four Gating Periods for Frequency Measurement: 1s, 10s, 100s, 1000s

Corresponding Resolution: 1Hz, 0.1Hz, 0.01Hz, 0.001Hz (Channel A); 1kHz, 100Hz, 10Hz, 1Hz (Channel B)

Main Display: 12 x 14mm-high blue 7-segment LED displays

Mode/Range Indicators: 11 x 3mm LEDs

Internal Timebase: Based on a 32.768kHz crystal. Accuracy approx. $\pm 1 \times 10^{-5}$

External Timebase: Input for 1Hz pulses from GPS receiver, etc. Accuracy using GPS 1Hz pulses approx. $\pm 1 \times 10^{-11}$

Input Impedance: Channel A, 1MΩ//25pF; Channel B, 50Ω//3pF; External timebase, 23kΩ//8pF

Power Source: External 9–12V DC supply **Current Drain:** <650mA

bled by the PIC but counting does not actually start until the arrival of the next rising edge of the timebase gating control signal selected by the block below it. This will either be the internal or external timebase signal, divided down by the selected ratio in the case of frequency measurements or the signal from the channel A input in the case of period measurements.

In response to the arrival of the first leading edge of the selected gating signal, the gate control circuit will enable the main gate to begin counting but on the arrival of the next leading edge the gate control circuit will close the gate again, to stop counting. The PIC monitors the gate control signal and when counting stops, it then proceeds to process the count (from both the four external decades and the eight internal decades) and pass it to the display.

Circuit details

Now let's have a look at the full circuit. Because it is quite large, it is split into four sections: the input channels, shown in Fig.2; the timebase section (Fig.3); the main control and counting section (Fig.4) and the display multiplexing section (Fig.5).

The upper section of Fig.2 shows the channel A input circuitry which handles signals in the range from below 10Hz to above 100MHz. This is very similar to that used in our earlier counters, with an input buffer using a 2N5485 high-frequency JFET (Q3), feeding a 3-stage waveform shaper (squarer) using an MC10116P triple ECL (emitter-coupled logic) line driver device (IC5). The square-wave output from IC5a is then passed to a logic level shifter using transistors Q4 and Q5, to convert it into CMOS/TTL logic levels to feed the counter itself.

The lower section of Fig.2 shows the channel B input circuitry which handles signals from 100MHz to 2.5GHz. This is very similar to that in the UHF Prescaler described in the October 2006 issue of SILICON CHIP.

IC1 is an ERA-2SM+ broadband amplifier device which provides a gain of around +15dB with wideband frequency choke RFC3 (an ADCH-80A) as its output load.

The amplified signals from IC1 are then fed to IC2, an MC12095 very high speed divide-by-four ECL device which forms the first stage of the channel B prescaling divider. IC2 feeds IC3, a programmable high-speed 8-bit ECL counter configured as a 125:1 divider. It then feeds IC4, an MC10EL32 high-speed ECL flipflop which performs the final division-by-two, to bring the overall frequency division to 1000 times. The outputs from IC4 are fed to a logic level shifter using Q1 and Q2, to convert them into a CMOS/TTL signal to feed the counter.

Timebase circuitry

Fig.3 shows the timebase circuitry. At upper left is the internal timebase generator which uses a 4060B oscillator/divider (IC6), together with a 32.768kHz crystal (X2) in the oscillator. It is followed by a 14-stage binary divider which delivers a 2Hz output signal from its O13 output (pin 3). This feeds IC7a, half of a 4518B dual 4-bit decade counter, where the 1Hz signal from the output of the first flipflop (pin 3) becomes our 1Hz internal timebase signal – fed to pin 1 of IC8a, one section of a 4093B quad Schmitt NAND gate.

The external timebase signal (from a GPS receiver) arrives via CON3 and feeds IC8c, another section of the 4093B. IC8a and IC8c perform the internal/external timebase selection, under the control of a TB INT-bar/EXT control signal from the PIC micro which arrives at lower right in Fig.3. This signal is inverted by IC8d to enable gate IC8a when the control signal is low but is also applied directly to pin 9 of IC8c, to enable this gate when the control signal is high.

So a low control signal selects the internal 1Hz timebase signal, while a high level selects the external timebase signal from CON3. The outputs of IC8a and IC8c are fed to IC8b, used here as a low-input OR gate.

The remaining section of Fig.3 shows the programmable timebase divider, which uses IC7b, IC9a and IC9b as three cascaded decade dividers and the four gates in IC10 (another 4093B quad Schmitt NAND) to select either the 1Hz signal from IC8b or the output of one of the three decade dividers – all under the control of the gating select signals which come from the PIC via control signal latch IC23 (see Fig.4).

Only one of these signals is high (logic 1) at any time, so if the "Gating 1s" signal is high, gate IC10d is enabled to allow the 1Hz signal from IC8b to pass through to IC11b and then to the counter's gate control circuitry.

On the other hand, if the "Gating 10s" signal is high, IC10a is enabled to allow the 0.1Hz signal from IC7b to pass through to IC11b. And the other two gating select signals work in the same way, enabling either IC10c or IC10b.

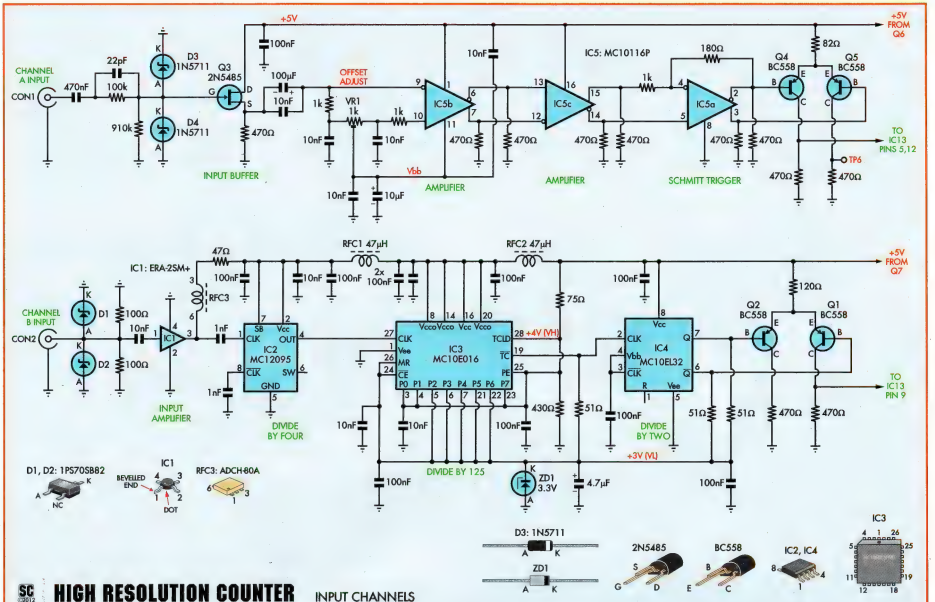

HIGH RESOLUTION COUNTER

INPUT CHANNELS

Fig.2: the input channel circuitry. Channel A handles signals up to 100MHz and is based on 2N5485 JFET (Q3) and an MC10116P triple ECL line driver (IC5a-IC5c). IC5c's output is then fed to Q4 and Q5, to convert it into CMOS/TTL logic. The channel B input circuitry handles signals from 100MHz to 2.5GHz. IC1 is an ERA-2SM+ broadband amplifier and this feeds IC2, an MC12095 divide-by-four ECL device. IC2 in turn feeds IC3, a programmable 8-bit ECL counter configured as a 125:1 divider. This drives IC4, an MC10EL32 ECL flipflop which performs the final division-by-two, to bring the overall frequency division to 1000 times. The outputs from IC4 are then fed to Q1 and Q2, to again convert them to a CMOS/TTL signals suitable for feeding the counter circuitry.

Accuracy and Resolution

Accuracy and resolution are equally important when you are making any kind of physical measurement. There's no point in having a measuring tool that's extremely accurate if it doesn't provide the resolution to allow reading its measurements with the same accuracy. That's why vernier callipers and micrometers were developed, to provide much greater length reading resolution than precision-etched steel rules.

Digital frequency counters are no exception. Since they operate by counting pulses at the input over a given period of time (the "gating" period), this means that their reading resolution is inversely proportional to the gating period. With the usual gating period of one second, the resolution is clearly 1Hz.

The simplest way to achieve a higher resolution is to increase the gating period. For example a gating period of 10 seconds gives a resolution of 0.1Hz, while a gating period of 100 seconds gives a resolution of 0.01Hz and a gating period of 1000 seconds a resolution of 0.001Hz (1mHz).

So extending the gating period improves the frequency resolution. But there's no point in doing this unless the accuracy of the counter's timebase is high enough to make the improved resolution meaningful. That's why a typical frequency counter using a temperature-compensated crystal oscillator as its internal timebase reference doesn't attempt to provide a gating period of longer than 10 seconds, giving a resolution of 0.1Hz.

Nowadays, there's a relatively easy way to provide a counter with a timebase signal that's much more accurate than a local crystal oscillator. Many GPS receivers provide a 1pps or 1Hz signal output that is accurate to within about 1 part in 10^{11}, because each GPS satellite contains two atomic clocks which together provide a time accuracy of better than 1 part in 10^{12}.

If a counter uses the 1Hz pulses from a GPS receiver as its external timebase, it can therefore make meaningful frequency measurements with a gating period as long as 1000 seconds and a corresponding frequency resolution of 0.001Hz.

That's why our new counter provides a selection of four different gating periods (1s, 10s, 100s and 1000s) and an external timebase input intended to accept the 1Hz signals from a GPS receiver. It's also why the counter is provided with a 12-digit display, to take advantage of the higher resolution and accuracy.

The net result is that the circuitry in Fig.3 allows the PIC to select either the internal or external timebase signals and also whether the selected signal is divided by 1, 10, 100 or 1000. The selected timebase signal emerges from pin 13 of IC11b, to feed the counter gate control circuitry.

Control & counting

Fig.4 covers the main control and counting sections. The PIC micro is at upper right, shown as IC22. Don't worry too much about the righthand side of IC22 at this stage, except to note that the outputs from port B of the PIC (RB0-RB7) are brought down to connect to control switches S2-S9 and the inputs of control signal latch IC23 (a 74HC373).

The PIC scans the control switches to change the input channel, timebase mode and so on for the counter and stores the corresponding control signals in IC23. As you can see, the outputs of IC23 are labelled to indicate the various control signal functions.

Just above the control switches is the PIC's master clock circuit, based on an 8.0MHz crystal. This is entirely standard except for the addition of a 6-30pF trimcap (VC1) to allow the oscillator's frequency to be adjusted as closely as possible to 8.00MHz. This is not for the PIC's benefit but because we take the 8MHz clock signal from pin 14 of the PIC and feed it down to IC24, a 74HC161 binary counter which divides it by eight to derive the 1MHz clock signal used to make the counter's period measurements.

Note that pins 9 and 10 of IC22 (RE1 and RE2) are used to control P-channel MOSFETs Q7 and Q6 over at far left. These transistors switch the +5V power to the input circuits for channels A and B (in Fig.2), allowing the PIC to turn off the power to the channel that is not currently in use.

Below Q6 and Q7 in Fig.4 you'll see the signals from the counter input channels (Fig.2) entering in the centre and feeding to selector gates IC13c, IC13b and IC13d. Then nearer the bottom, the timebase gating signal from IC11b (in Fig.3) enters and connects to input pins 3, 4 & 5 of IC11a.

To put things into perspective, gates IC13b, IC13c and IC12a are used to select which signal is fed to the counter's main gate (via IC12b), while gates IC11a and IC13d below them are used to select which signal is fed to the main gate control flipflops IC17a and IC17b (via IC12c).

In greater detail, in order to make frequency measurements, the PIC drops the FREQ-bar/PERIOD control signal line (from pin 12 of IC23) to logic 0, which disables gate IC12a but enables gate IC11a because of the logic 1 presented to pin 2 of IC11a from IC18d (used here as an inverter). So the timebase signal selected by the circuitry in Fig.3 is able to pass through IC12c and trigger the main gate control circuit around IC17.

At the same time, the PIC raises either the SEL I/P CHAN A control signal from pin 9 of IC23 or the SEL I/P CHAN B control from pin 15 of IC23, to enable either gate IC13b or IC13c. This allows one of the two input channel signals to pass through IC12b to the counter's main gate.

But where exactly *is* the counter's main gate? It's actually inside IC14, a very fast 74AC163 programmable synchronous 4-bit counter which we're using here as a decade counter – the very first decade of our 12-decade counter. The counter input signal is fed into the CP input of IC14 (pin 2), while the main gate control signal from pin 5 of IC17 is fed to the CEP and CET inputs (pins 7 and 10).

So IC14 can only begin counting the input signal when IC17 "opens the gate" by raising the CEP/CET inputs to a logic high.

IC14 is made to act as a decade counter by feedback applied via gate IC15a. The inputs of IC15a are connected to the '1' and '8' outputs of IC14, so that as soon as the count of IC14 reaches '9', the output of IC15a drops and pulls the synchronous reset pin (SR-bar, pin 1) of IC14 to logic 0. As a result, the very next pulse edge reaching the CP input of IC14 causes it to reset to '0' instead of incrementing to '10'.

Just before we continue to follow the signal path through the counter, let's explain how the gate control circuitry around IC17 works. Two very fast flipflops inside IC17 are interconnected in a kind of master/slave arrangement called a "synchroniser". The simplest way to understand it is to follow through one operating cycle, as follows:

Before counting begins, the PIC resets both IC17a and IC17b at the same

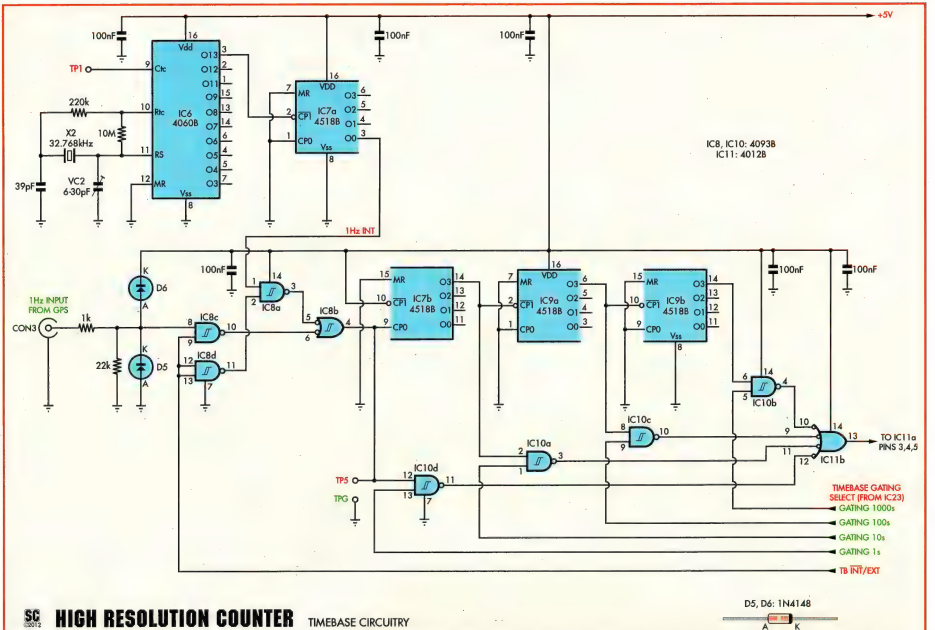

HIGH RESOLUTION COUNTER

TIMEBASE CIRCUITRY

D5, D6: 1N4148

Fig.3: the timebase generator uses a 4060B (IC6) and a 32.768kHz crystal (X2) in the oscillator. IC6's internal 14-stage binary divider delivers a 2Hz output signal from its O13 output and this feeds IC7a, half of a 4518B dual 4-bit decade counter, The resulting 1Hz signal from pin 3 is then fed to pin 1 of Schmitt NAND gate IC8a. IC7b, IC9a & IC9b operate as cascaded decade dividers, while NAND gates IC10a-IC10d are used to select either the 1Hz signal from IC8b or the output of one of the three decade dividers. The gating select signals come from the PIC via control signal latch IC23 (see Fig.4).

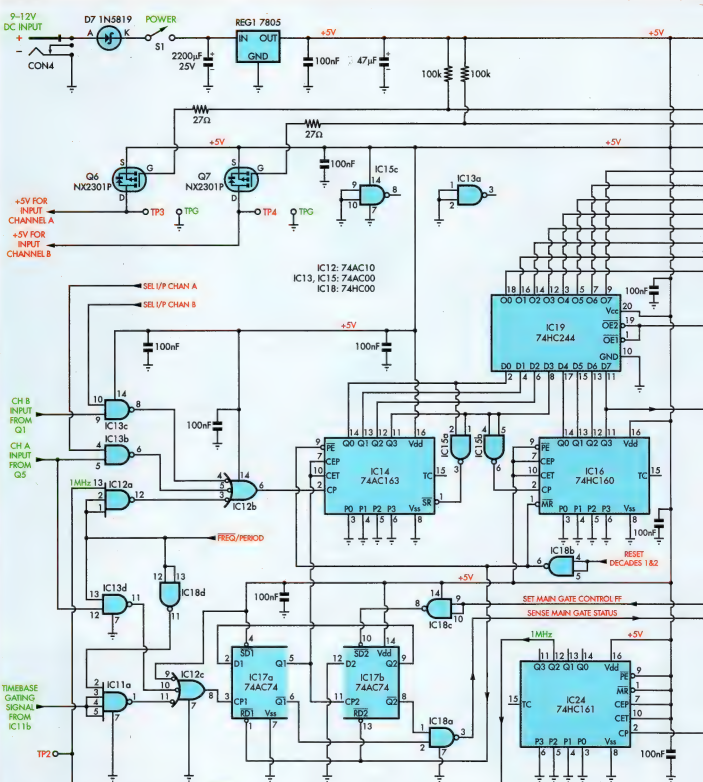

HIGH RESOLUTION COUNTER

CONTROL & COUNTING CIRCUIT

Fig.4: the PIC micro (IC22) forms the heart of the main control and counting circuit. As shown, its port B outputs (RB0-RB7) connect to control switches S2-S9 and to the inputs of control signal latch IC23 (74HC373). In operation, the PIC scans the control switches to change the input channel, timebase mode and so on for the counter and stores the corresponding control signals in IC23. In addition, the PIC processes the Channel A & Channel B input signals and the timebase signals (after processing via various logic gates, flipflops and counters) and drives the display board via CON5.

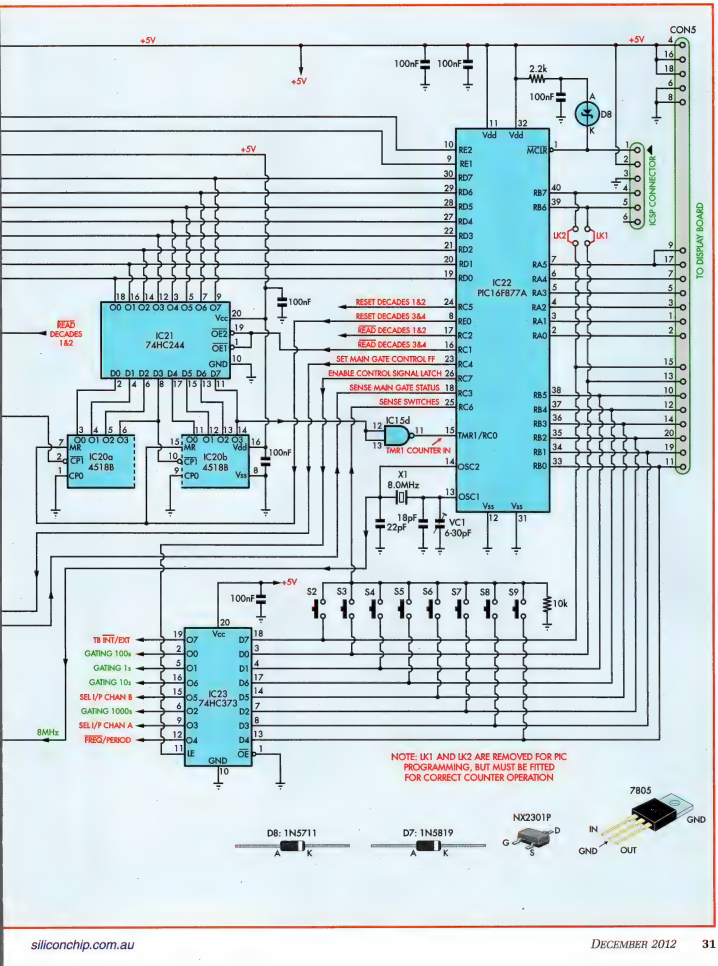
+5V
100nF
2.2k
D8
CON5
Vdd
MCLR
RE2
RE1
RD7
RD6
RD5
RD4
RD3
RD2
RD1
RD0
RB7
RB6
RA5
RA4
RA3
RA1
RA0
RC5
RE0
RC2
RC1
RC4
RC7
RC3
RC6
RB5
RB4
RB3
RB2
RB1
RB0
TMR1/RC0
OSC2
OSC1
Vss
IC22
PIC16F877A
ICSP CONNECTOR
LK2
LK1
TO DISPLAY BOARD
IC21
74HC244
Vcc
GND
READ DECADES 1&2
RESET DECADES 1&2
RESET DECADES 3&4
READ DECADES 1&2
READ DECADES 3&4
SET MAIN GATE CONTROL FF
ENABLE CONTROL SIGNAL LATCH
SENSE MAIN GATE STATUS
SENSE SWITCHES
IC15d
TMR1 COUNTER IN
IC20a
IC20b
4518B
X1
8.0MHz
18pF
22pF
VC1
6-30pF
S2
S3
S4
S5
S6
S7
S8
S9
10k
IC23
74HC373
TB INT/EXT
GATING 100s
GATING 1s
GATING 10s
SEL I/P CHAN B
GATING 1000s
SEL I/P CHAN A
FREQ/PERIOD
8MHz
LE
OE
NOTE: LK1 AND LK2 ARE REMOVED FOR PIC PROGRAMMING, BUT MUST BE FITTED FOR CORRECT COUNTER OPERATION
D8: 1N5711
D7: 1N5819
NX2301P
7805
IN
GND
OUT

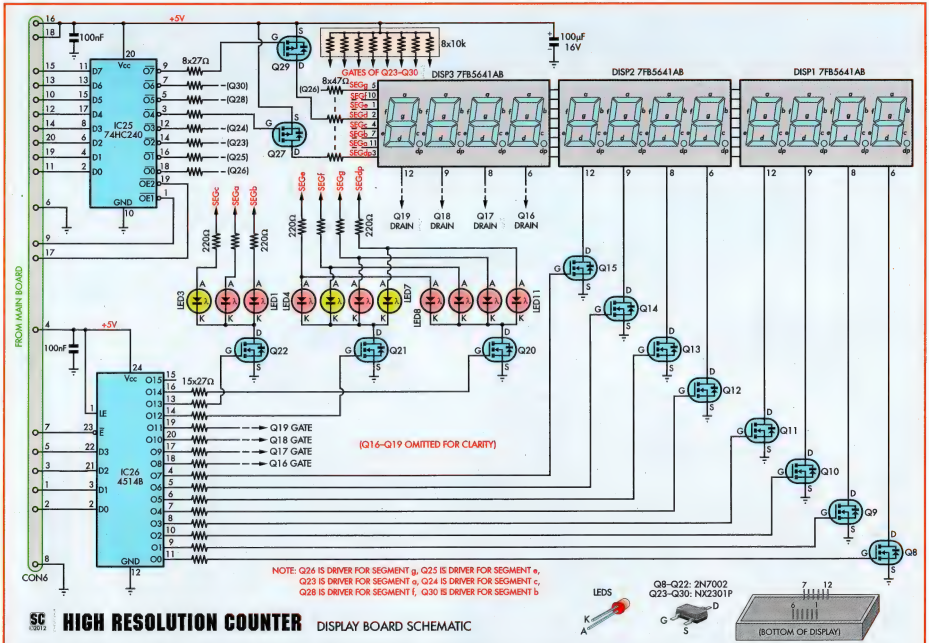

Fig.5: the displays are all driven in multiplexed fashion. As shown, the common cathodes of the three 4-digit blue LED displays, DISP1-DISP3, are switched by 2N7002 N-channel Mosfets (Q8-Q19). These Mosfets are controlled by the PIC's RA port pins via CON5 and CON6 and then via IC26, a 4514B 4-bit to 16-bit decoder. The matching display segments are connected in parallel and are controlled from the PIC's RB port pins via IC25 (a 74HC240 octal buffer and line driver) and eight NX2301P P-channel MOSFETs (Q23-Q30). The mode and range indicator LEDs are multiplexed in similar fashion.

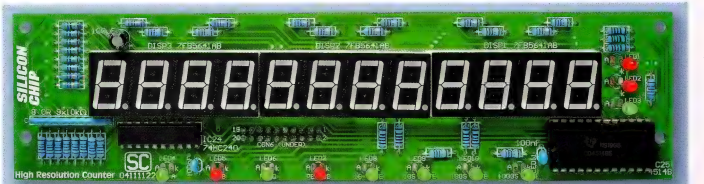

The display PCB carries the three 4-digit 7-segment LED readouts plus the various mode and indicator LEDs. The full assembly details are in Pt.2 next month.

time as it resets the first two decades of the main counter (IC14 and IC16). So to begin with, both IC17a and IC17b are in the reset state with pins 6 and 8 both at logic 1 (high). As a result, pins 5 and 9 are both low, with pin 5 holding the main gate inside IC14 closed and pin 9 holding the D input of IC17a at logic 0 so that IC17a cannot switch to its set state in response to the leading edge of any timebase pulse arriving at the CP1 input (pin 3) from IC12c.

To initiate a counting sequence, the PIC provides a positive-going pulse at its RC4 output (pin 23) – which is labelled SET MAIN GATE CONTROL FF. This logic high is applied to both inputs of IC18c, which is used as an inverter.

As a result, a negative-going pulse is applied to the SD2-bar input of IC17b (pin 10), immediately switching IC17b into its set state with pin 9 high and pin 8 low. And since the D1 input of IC17a (pin 2) is tied to pin 9, this effectively "primes" the main gate control flipflop IC17a.

The leading edge of the next timebase pulse to arrive at the CP1 input (pin 3) of IC17a will immediately trigger this flipflop into its set state. This in turn drives pin 5 high and opens the main counter gate in IC14 to begin counting.

At the same time, when the Q1 output of IC17a switches high, it also applies a clock edge to the CP2 input of IC17b (pin 11) and since the D2 input of IC17b is tied to logic 0 (ground), this causes IC17b to switch back to its reset state with pin 9 low and pin 8 high. This causes the D1 input of IC17a (pin 2) to be pulled low as well, preparing IC17a for the final part of the cycle.

Counting then continues, but only until the next timebase pulse leading edge arrives at pin 3 of IC17a. As soon as this happens IC17a switches back to its reset state, with Q1 (pin 5) falling back to logic 0 and closing the main gate inside IC14.

So the result of this timing control cycle is that the counter's main gate is opened for exactly one timebase period and then closed again. And although the PIC kicks off the cycle by sending out the SET MAIN GATE CONTROL FF pulse, the actual gate timing is determined by the timebase signal applied to pin 3 of IC17a.

By the way, the PIC is able to determine when counting stops by monitoring the output of gate IC18a, which has its inputs connected to the Q-bar outputs of IC17a and IC17b (pins 6 & 8). The output of IC18a only switches low when both Q-bar outputs are high, which only happens at the end of a control cycle when counting stops. The output of IC18a is connected to the PIC's RC3 input (pin 18, with the label SENSE MAIN GATE STATUS). This allows the PIC to sense when counting stops.

As already noted, IC14 contains not only the counter's main gate but also the first decade of the counter itself. And the next decade of counting is performed by IC16, a 74HC160 synchronous decade counter. The CP input of IC16 (pin 2) is connected to the output of IC15b (pin 6), while both inputs of IC15b (used here as a fast inverter) are connected to the '8' output (pin 11) of IC14.

As a result, a positive-going clock edge is fed to the CP input of IC16 when IC14's count falls to zero, causing IC16 to increment every time IC14 has counted 10 input pulses.

The third and fourth counting decades are based around IC20a and IC20b, two halves of another 4518B dual-decade counter. As you can see, the Q3 or '8' output of IC16 (pin 11) is connected directly to the CP1-bar input of IC20a (pin 2), so that IC20a increments each time the count of IC16 returns to zero. Similarly, the Q3 output of IC20a is connected directly to the CP1-bar input of IC20b (pin 10), so IC20b increments each time the count of IC20a returns to zero.

To recap, only the first four "high speed" decades of the counter are implemented in hardware external to the PIC, ie, IC14, IC16 and the two halves of IC20. The rest of the counting is done inside the PIC itself, mainly by its internal timer/counter module TMR1. This is a 16-bit timer/counter, with its input brought out to the PIC's TMR1/RCO pin (pin 15).

Since TMR1 increments on the positive-going edge of the signal fed to pin 15, we need to invert the "carry over" from pin 14 of IC20b to achieve correct counting. This is done by gate IC15d which is connected as an inverter.

But how can we can use the PIC's TMR1 counter module to count the remaining eight decades, when as a 16-bit counter it can clearly only count to 65536 – fewer than five decades? Well, we can do so because inside the PIC we can arrange for the overflow of TMR1 (when it rolls over from 65535 to zero) to trigger an interrupt and then use a small interrupt servicing routine to increment a further 8-bit counter register every time this happens.

Doing this effectively converts the counter inside the PIC into a 24-bit counter, able to count up to 16,777,215.

Power supply & ICSP

Just before we leave Fig.4, two sections not yet mentioned are the power supply circuitry and the ICSP (in circuit serial programming) interface.

The power supply is simple, with

This is the view inside the completed frequency counter, from the rear. All the parts fit on two PCBs which are linked together by a short ribbon cable. Power comes from a 9-12V DC plugpack supply.

reverse polarity protection diode D7 in series with the front-panel power switch S1 and then a standard 7805 regulator (REG1) to provide a stabilised and filtered 5V supply for all of the counter circuitry.

The ICSP circuitry (upper right) enables the PIC to be programmed or reprogrammed with the counter firmware at any time. All the connections needed for programming are brought out to the usual 6-pin ICSP connector, while the PIC's RB7 and RB6 pins are isolated from the rest of the counter circuit during programming by removing links LK1 and LK2.

After programming is completed, these two links are then refitted so that the counter can use RB7 and RB6 in the normal way.

Finally, note that all the connections from the PIC's RA and RB I/O ports are brought out to 20-way DIL connector CON5, shown at far right in Fig.4. This allows the display PCB, shown in Fig.5, to be connected via a ribbon cable fitted with IDC headers.

Multiplexed display

All the displays are driven in multiplexed fashion – not just the 12 numeric digit displays but the 11 indicator LEDs as well. The numeric displays consists of three 4-digit 7-segment blue LED displays, DISP1-DISP3, which have their common cathodes controlled by 2N7002 N-channel Mosfets Q8-Q19. Note that only Q8-Q15 are shown while Q16-Q19 are "implied", with dotted lines. This is to save space on the diagram.

These Mosfets are controlled by the PIC's RA port pins via CON5 and CON6 (linked by the ribbon cable) and then through IC26 – a 4514B 4-bit to 16-bit decoder. This circuitry thus forms the "digit drive" section of the display multiplexing system.

All matching segments of the display digits are connected in parallel and driven by NX2301P P-channel MOSFETs, Q23-Q30. Again, most of these connects are shown dotted, to save space on the diagram.

These P-channel Mosfets are controlled by the eight outputs from IC25, a 74HC240 octal buffer and line driver. This is controlled in turn by the PIC's RB port pins, again via CON5 and CON6. So the circuitry at upper left in Fig.5 forms the "segment drive" part of the display multiplexing.

As you can see, the 11 indicator LEDs (LED1-LED11) are part of the same multiplexing system, split into three groups forming three "pseudo display digits". The three groups are controlled by Mosfets Q20-Q22, controlled in turn by outputs O12, O13 and O14 of IC26.

The anodes of the LEDs are connected to the display segment driver lines from Q23-Q30, so they can be controlled by the PIC as part of the multiplexing. For example, LED1 is addressed as segment b of "digit" 15, while LED7 and LED11 are addressed as the DP (decimal point) segments of "digits" 14 and 13 respectively. As far as the PIC's firmware is concerned, the indicator LEDs are simply specific segments of the three additional pseudo display digits.

That's all we have space for in this first article on our new high-resolution counter. Next month, we will present the construction details for both the main PCB and the display PCB and give the set-up procedure, which is simple and straightforward. SC

Introducing Microchip's New 16-bit dsPIC33E Digital Signal Controllers and PIC24E Microcontrollers

Easy migration to 70 MIPS performance with Enhanced Core 16-bit DSCs and MCUs

Migrating to 70 MIPS performance is easy as our next generation dsPIC33E DSCs and PIC24E MCUs are fully upwards compatible from our large families of 2nd generation dsPIC33F and PIC24H devices.

Based on the next generation dsPIC® DSC/PIC24 MCU core, the nine new devices pack 536 KB of Flash memory and 52 KB of RAM, with expanded peripheral and I/O capabilities, into packages ranging from 64 to 144 pins. The dsPIC33E and PIC24E controllers give you a USB 2.0 OTG interface, and expanded motor-control, graphics, audio and real-time embedded control capabilities compared to devices based on the previous core.

A new auxiliary Flash module lets you programme on-the-fly and erase Flash data without slowing down your normal CPU operation. Use the new USB 2.0 On-The-Go (OTG) peripheral, four SPI, four UART and two I^2C™ interfaces for easy connectivity, and the three on-chip analogue comparators to reduce system cost and the number of external components. Peripheral Pin Select (PPS) allows most digital peripherals to be remapped to any I/O pin promoting customisation and easing board layout.

Your linked DMA operations will be started automatically by the enhanced, fully independent 15-channel DMA controller and an improved debugger gives you complex breakpoints for faster debugging. With new timer capabilities, the dsPIC33E DSCs and PIC24E MCUs also give you more flexible and powerful input-capture and output-compare capabilities.

GET STARTED IN 3 EASY STEPS:

1. Choose a low-cost dsPIC33E or PIC24E USB Starter Kit
2. Download a free evaluation version of our MPLAB® C Compiler
3. Use one of our many code examples or software libraries to solve your application task

www.microchip.com/16bit

dsPIC33E USB Starter Kit (Part # DM330012)
PIC24E USB Starter Kit (Part # DM240012)

Microchip Technology Australia
Tel: (02) 9868 6733 E-mail: aust_nz.inquiry@microchip.com

MICROCHIP

Microcontrollers • Digital Signal Controllers • Analog • Memory • Wireless

The Microchip name and logo, dsPIC, MPLAB, and PIC are registered trademarks of Microchip Technology Incorporated in the U.S.A. and other countries. dsPICDEM, PICkit, and REAL ICE are trademarks of Microchip Technology Incorporated in the U.S.A. and other countries. All other trademarks mentioned herein are the property of their respective companies. © 2012 Microchip Technology Incorporated. All rights reserved.

By NICHOLAS VINEN

USB POWER MONITOR

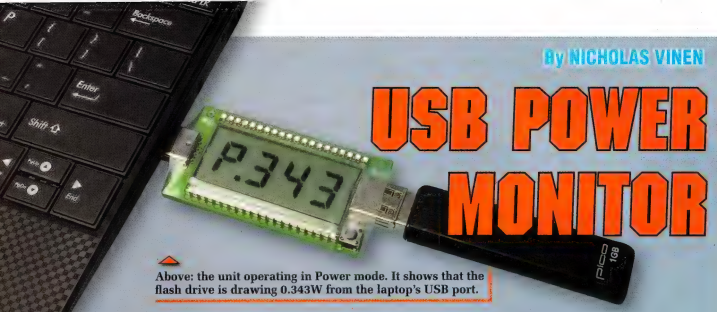

Above: the unit operating in Power mode. It shows that the flash drive is drawing 0.343W from the laptop's USB port.

Curious about how much power your USB peripherals use? Perhaps you are building a USB device and want to check its consumption. Or maybe you want to figure out how many devices you can plug into an un-powered hub or what impact a USB device has on your laptop battery life. Build this USB Power Monitor and find out.

THIS SIMPLE, compact device connects in series with one or more USB devices and displays the current they are drawing at any given time. It can also show you the bus voltage and calculate the power consumption in watts. It's auto-ranging so it will read down to just a few microamps and up to over an amp. Similarly, it will read out in milliwatts or watts. You can cycle the modes simply by pressing a button.

It uses a low value (50mΩ) shunt to measure the current so this will have little effect on the voltage received by the peripherals. The readings are displayed on a 4-digit LCD panel, similar to that used by digital multimeters. This is readable from a wide range of angles. Calibration is performed by the microcontroller the first time it is powered up and can be repeated later to keep measurements as accurate as possible.

The whole unit measures 90 x 35 x 10mm and is encased in clear heatshrink tubing. When plugged in, it's like a wide USB flash drive with an LCD on top. It can either go straight into a USB port or be connected via a USB extension cable. It can be used with ports on either side of a laptop (using the display flip feature), although it's optimised for use on the righthand side.

USB power overview

The Universal Serial Bus consists of four lines per port: two for power (0V & 5V) and two differential signals for bidirectional data (D+ & D-). The supply is nominally 5V but due to imperfect regulation at the source and voltage drops across the wiring, a device can expect to receive between 4.4V and 5.25V.

A USB device is allowed to initially draw 100mA but can negotiate for more current; up to 500mA. With the nominal 5V supply, that means that no more than 2.5W can be drawn from any given port. Some (but not all) USB ports provide current limiting so that if too many devices are connected or if a device tries to draw too much power, the supply is cut and the port reset.

In practice though, certain devices such as portable hard drives will draw more than 500mA when they are first plugged in (eg, as the hard disk motor spins up) so the USB port current limit is not strictly enforced; many ports will allow up to 1A or more to be drawn before shutting down. This is a low enough limit to prevent a short circuit from damaging the port but high enough that most connected devices should get enough power.

To complicate matters, multiple devices can be connected to a single USB port using a hub. The power drawn by an unpowered hub is its own operating power (usually ~50mW) plus that of all the devices plugged into it. You can see how you can easily exceed 500mA per port by plugging enough devices into a hub – you can even plug hubs into hubs!

Powered hubs are another matter; these have their own power supply (typically a plugpack) and so only a minimal amount of current is drawn from the upstream port.

Standby mode

When a computer enters standby or sleep (power saving) mode, it sends a signal to the connected USB peripherals to do the same. When in standby, they are expected to draw no more than 0.5mA (2.5mW). When the computer subsequently "wakes up", it sends another signal to the peripherals which

can then resume normal operation.

When in standby, devices can wake up the host and this feature is most often used by USB mouses and keyboards. Also, devices may go into standby mode if they are currently inactive, for example, a hub with no connected devices will generally drop into standby mode after a few seconds but will resume normal (higher power) operation if you plug a device into the hub.

So you can see how a USB power monitor has a number of useful applications. You can test devices to ensure that they do not draw more than 0.5mA in standby or 100mA before they have been configured. You can check the total power draw of a hub and its attached devices. You can even see how the power consumption changes depending on what the devices are doing, in real time.

Also, devices running from a portable computer's USB ports will cause its battery to discharge faster and you may wish to determine just how much effect this has on battery life. By measuring how many watts each device draws, you can divide this by the battery capacity in watt-hours to determine the proportion of battery charge those devices will deplete per hour of operation.

For example, say you have a 3G wireless internet dongle and the USB Power Monitor tells you that it draws 2.5W while active. If your laptop has a 12V, 5Ah (60Wh) battery then this will drain 2.5W ÷ 60Wh = 4.2% of the battery's capacity, per hour of use.

If your laptop normally lasts four hours on battery then it will typically draw 60Wh ÷ 4h = 15W, so we can calculate that it will last 60Wh ÷ (15W + 2.5W) = 3 hours 30 minutes with the 3G dongle connected and operating, ie, using the 3G dongle will reduce the battery life by 30 minutes.

Design

We have seen other designs for USB power meters and while we liked the concept, we weren't so impressed with the execution. While you can measure the current drawn by a USB device with just a USB plug, socket, shunt resistor, shunt monitor and panel meter, this approach is quite limited.

A typical panel meter has a full scale sensitivity of 200mV which means you can either measure up to 200mA with 0.1mA resolution or up to 2A with 1mA resolution. Really, we want to measure to at least 500mA and we want a minimum resolution of 0.1mA; preferably better at lower current readings. Our design, while a little more complex, does even better, with readings beyond 1A and a resolution of 1µA for readings below 10mA.

By using a microcontroller we can also add some extra modes such as voltage and power reading which just make it so much more convenient to use. We were also able to keep the unit fairly slim and compact, with large, easy-to-read digits.

Features & Specifications

Measurement modes: current, voltage, power
Current resolution: 1µA (0-10mA), 1mA (10mA-1A+)
Voltage resolution: 10mV (4.4-5.5V)
Power resolution: 10µW (0-10mW), 1mW (10mW-1W), 10mW (1-5W+)
Current accuracy: ±2.5% ±0.1mA (mA range), ±5% ±10µA (µA range)
Voltage accuracy: ±2.5% ±10mV
Power precision: ±5% ±0.1mW
Temperature-related error: typically <1µA/°C
Load voltage drop: typically less than 50mV
Power consumption: 5.3mA/26mW
Other features: display flip mode, mode memory, digital calibration

Circuit description

Refer now to Fig.1 for the complete circuit diagram of the USB Power Monitor. All the parts shown mount on a single double-sided PCB. USB plug CON1 goes into the computer or USB charger. Current then flows from its pin 1 (+5V) through the 0.05Ω shunt resistor to pin 1 of CON2, the USB socket. Return current passes directly from pin 4 of CON2 (ground) to CON1.

The USB D+ and D- data signals pass straight through from pins 2 & 3 of CON1 to CON2, with the tracks running right across the PCB. They are close together so that any interference couples into both lines by a similar amount, preserving the integrity of the differential signal.

The 0.05Ω resistor is a special type with "Kelvin connections", ie, it has four terminals, each pair of which are internally joined to the resistive element. This prevents resistance in the solder joints from affecting current measurements; otherwise, this resistance would effectively be in series with the resistor itself and thus its

USB Power Delivery Enabled Devices

Currently, virtually all USB ports supply a nominal 5V and this project relies on that fact. USB 3.0 has introduced ports able to supply up to 900mA (which this device can handle), increasing the power delivery from 2.5W per port to 4.5W. But for a lot of devices, that still isn't enough.

Hence, a new specification has been developed. Called "USB Power Delivery", it is designed to allow compatible devices to draw much more power from a USB 2.0 or USB 3.0 port – up to 100W. Partly this is achieved by the device negotiating for a higher supply voltage of either 12V or 20V, as well as beefier cables to carry up to 5A.

We haven't seen any devices which comply with this spec yet but when they arrive, you'll have to be careful not to connect the USB Power Monitor between a port and device which may be operating at 12V or 20V. If you do and the bus voltage is increased, it will almost certainly destroy the USB Power Monitor.

Part of the spec involves having the hardware able to check that the attached cable(s) are capable of carrying the higher voltages and currents, so it's possible that they will refuse to deliver a higher voltage with the USB Power Monitor attached. But we wouldn't rely on it.

Parts List

1 double-sided PCB, code 04109121, 65 x 36mm
1 4-digit LCD (Jaycar ZD1886)
1 PCB-mount right-angle USB Type A plug (element14 1696544 or 2067044)
1 PCB-mount right-angle USB Type A socket (Jaycar PS0916, Altronics P1300, or equivalent)
1 5-pin header, 2.54mm pitch (CON3)
1 PCB-mount tactile pushbutton
1 80mm length of clear heatshrink tubing, 25-30mm diameter

Semiconductors
1 PIC18F45K80-I/PT programmed with 0410912A.hex (IC1)
1 INA282AID shunt monitor (IC2)
1 OPA2376AID dual op amp (IC3)

Capacitors (SMD 3216, X5R/X7R)
1 10µF 6.3V
3 220nF 16V

Resistors (SMD 3216, 1% 1/8W)
1 120kΩ
3 10kΩ
1 100Ω
1 50mΩ 0.5% 0.5W 4-terminal shunt (element14 1462296)

Note: kits for this project will be available from Jaycar Electronics with SMDs presoldered – Cat KC-5516).

value would be higher than expected.

We measure the current flowing through the shunt by sensing the voltage drop across it. Ohm's Law tells us that this will be 50mV/A ±0.5% (the resistor tolerance). So we will be measuring very small voltages; the unit will read down to 10 microamps or less, giving a voltage drop of around 0.5µV.

The voltage across the shunt is amplified by IC2, an INA282 chopper-stabilised "zero-drift" current shunt monitor. This operates in a similar manner to an instrumentation amplifier but is specifically designed for measuring current. It runs directly off the 5V USB supply from CON1, with a 220nF bypass capacitor to ensure low supply impedance.

As well as amplifying the voltage drop, it provides an output that is referenced to ground or some other low voltage, regardless of the supply voltage fed to the shunt which can be in the range of -14V to 80V. It can even measure current flow in either direction but we are not using that feature in this circuit.

The INA282 has an internal 1:1 resistive divider between the REF1 and REF2 pins which can be used to generate a half-supply rail, so that the output can swing symmetrically for bidirectional current measurement. As we aren't using that feature, we simply tie the REF1 and REF2 pins together and drive them with a low-impedance voltage source which is then the reference (signal ground) voltage for IC2's output.

With no voltage across the shunt resistor, the output at pin 5 sits at the same voltage as we are driving the REF1/REF2 pins (3 & 7) with. As the voltage across the shunt rises, the output voltage increases proportionally above this reference level. The INA282 has a fixed internal gain of 50, giving us an output of 2.5V/A.

IC2 can have an input offset voltage of up to ±70µV and with a 50mΩ shunt, that gives an equivalent error of ±1.4mA or ±3.5mV at the output. This offset error varies from device to device but remains fairly constant over its life and with variations in supply voltage and temperature. The error is usually well under 3.5mV but can be enough to seriously affect low current readings (eg, in the microamp range) so we need a way to trim it out.

If that error was always positive, we could simply connect REF1 and REF2 to ground, have microcontroller IC1 (PIC18F45K80) measure IC2's output with no current flow, store that value and subtract it from future readings. But the offset voltage can be negative too and this scheme would fail to correct negative output errors.

To solve this, we are driving the REF1 and REF2 pins with a nominal 385mV reference level which is derived from the 5V supply using a resistive divider (120kΩ/10kΩ). This voltage is buffered by op amp IC3a, configured as a voltage follower. This ensures that REF1 and REF2 are driven with a low impedance, maintaining the accuracy of IC2's measurements.

The software in the micro measures the output of IC2 with no current flowing, which is the ~385mV reference plus IC2's output offset error. It can then subtract this from future readings and since the reference voltage is higher than the largest possible negative offset error, this will always be able to correct for the offset. It should not require frequent re-calibration as IC2 has a very low offset drift (hence its "zero-drift" moniker).

Microamp measurements

Op amp IC3b amplifies the output of IC2 by 100 times, to allow IC1 to accurately read low current values. Unfortunately, this also amplifies IC2's offset error by a factor of 100. IC3b itself contributes a further offset of up to ±2.5mV but this pales in comparison to the up to ±350mV error (±3.5mV x 100) contributed by IC2. This is why we chose a reference voltage of around 385mV, to allow for the full range of offset variations to be trimmed out.

The 220nF capacitor across IC3b's feedback resistor (10kΩ) greatly reduces the amount of noise from IC3b's output, as it dramatically reduces the gain stage's bandwidth to about 72Hz. IC3b's effective signal "ground" is the same reference voltage that is fed to IC2.

Microcontroller IC1 measures the output of shunt monitor IC2 at its AN2 input (pin 21). Similarly, the amplified signal from IC3b goes to the AN3 input at pin 22. The micro can then select which voltage to measure. In practice, it does this by first measuring the voltage at AN3 and if this indicates a reading of 10mA or more, it measures AN2 instead for a greater measurement range.

We interpret readings from AN2 as 2.5mV/mA and for AN3, 250mV/mA. IC1 uses an internal 4.096V reference as the full-scale voltage for each conversion, giving a maximum reading of about 1.5A for input AN2 and 15mA for input AN3. With a 5V supply, the output of IC2 can go as high as 4.8V, giving us a maximum possible reading of about 1.75A.

As well as a very low offset voltage, op amp IC3 (OPA2376) has a number of other attributes which make it suitable for use in this type of application. It's designed to run from low supply voltages (2.7-5.5V) and has low noise, high bandwidth (5.5MHz), low quiescent current (~1.5mA) and an output that can swing to both supply rails (down to 0V and up to 5V).

Note that the ~385mV reference voltage will vary with the USB supply voltage as it is derived from it. This could introduce an error in the current

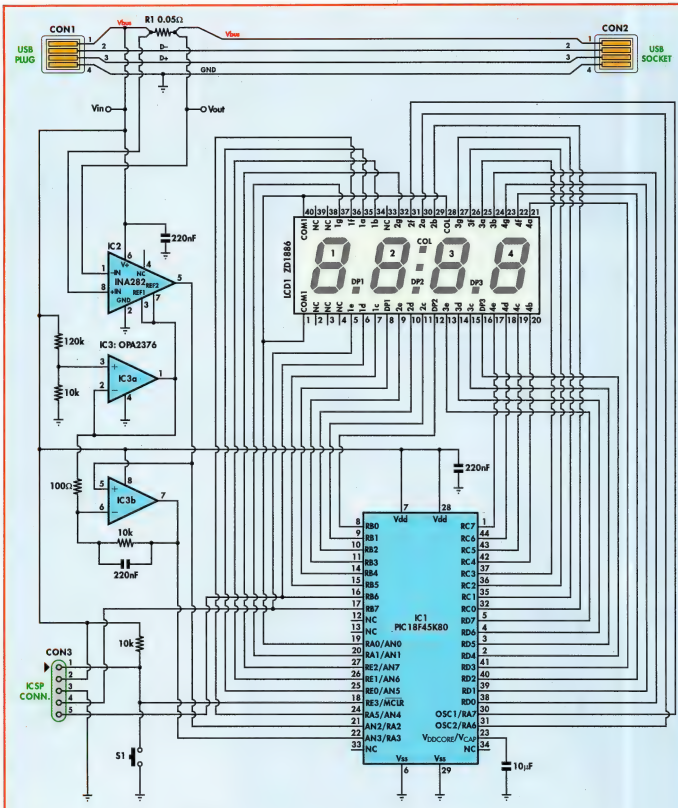

USB POWER MONITOR

Fig.1: the complete circuit of the USB Power Monitor. USB current passes through a 50mΩ shunt resistor and the voltage drop across this is amplified by shunt monitor IC2 and then further amplified by op amp IC3b. Microcontroller IC1 uses its internal ADC to measure the current and display it on LCD1. Op amp IC3a buffers a reference voltage, used to allow IC1 to determine the static (offset) error in the current measurements.

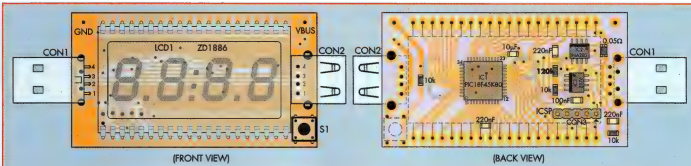

Fig.2: top and bottom views of the USB Power Monitor PCB. The LCD, connectors and pushbutton switch S1 (used to change modes) are the only components on the top. All the active circuitry goes on the underside and this keeps the unit compact. The VBUS & GND pads are provided so you can measure the USB voltage for calibration. The completed PCB assembly can be housed in clear heatshrink tubing for protection.

measurements but microcontroller IC1 can compensate for this by measuring the supply voltage and adjusting the value that it subtracts from each reading. This mostly eliminates the effect of supply variation on readings.

Note also that part of the reason for selecting a 50mΩ shunt is to keep its dissipation low over the expected current range. At 1A, it will dissipate just 50mW (I^2R) and even at 2A, it will be a manageable 200mW – the part is rated for up to 0.5W.

Display driving

The 4-digit LCD (LCD1) is driven directly by microcontroller IC1. The LCD has a total of 32 segments – four 7-segment digits plus three decimal points (DP1-DP3) and a colon. Each segment is connected at one end to a dedicated pin while at the other end, all segments are joined together and connect to a pair of common pins, COM1 & COM2 at left. To turn a segment on (dark), we drive the segment with a 6-10V peak-to-peak square wave and to turn it off, we maintain 0V across the segment.

This is achieved by driving all the LCD pins (including COM1 & COM2) with one of two 5V 50Hz square waves which are 180° out of phase, ie, one is an inverted version of the other. Any segments driven with the same signal as the common pins have no voltage across them and so remain off. Those driven with the inverted square wave, compared to the common pins, receive 10V peak-to-and so turn on.

We use an AC drive signal since DC drive slowly damages the LCD by an electrochemical process. In this case, it's also required to provide a sufficient drive voltage as this method doubles the RMS voltage across the segments, ie, they receive 10V rather than 5V. The AC signals are generated using one the microcontroller's internal timers and two of the compare units, combined with an interrupt handler routine that updates the output pins at 100Hz.

Like the analog chips, microcontroller IC1 runs directly off the USB bus voltage. Note that we haven't made any additional connections from the USB supply to allow it to sense that voltage, in order to display it. Rather, this is achieved by configuring its ADC to sample its internal (nominal) 1.024V reference in relation to its supply voltage. It can then calculate the reciprocal of this in order to determine what its supply voltage and thus what the bus voltage actually is.

The same 1.024V reference is multiplied by four using an internal op amp, to produce the 4.096V ADC reference voltage which allows current measurements to be made accurately.

In addition to a 220nF bypass capacitor across the 5V supply, IC1 has a 10µF filter capacitor connected to its V_{DDCORE} pin, which is required to allow its internal 2.5V core regulator to function properly.

A pushbutton is connected between pin 18 of IC1 (RE3/MCLR) and ground, with a 10kΩ pull-up resistor. Normally, this pin is used to reset the micro but we have programmed it to disable that function so that we can use this pin as a digital input, to sense when the button is pressed. The button is used to change modes and also re-calibrate the unit.

The micro can still be programmed since the programmer pulls the MCLR pin well above 5V to activate programming. An in-circuit programming header (CON3) is provided although the header does not need to be sol-

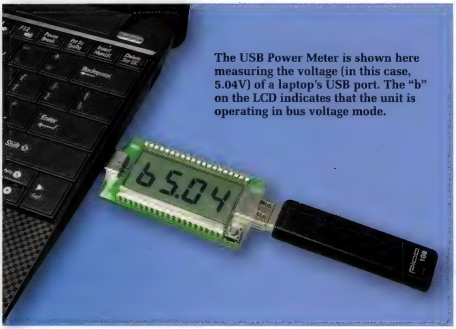

The USB Power Meter is shown here measuring the voltage (in this case, 5.04V) of a laptop's USB port. The "b" on the LCD indicates that the unit is operating in bus voltage mode.

These views show the unit before the clear heatshrink tubing is fitted. Take care when soldering in the SMDs – they must be correctly aligned with their pads. You can easily remove any solder bridges using solder wick.

dered to the PCB and can be left out altogether if a pre-programmed chip is used.

Software

The software for IC1 is fairly simple but performs multiple tasks. It must constantly update all the LCD drive pins, sample the ADC inputs, perform calculations to determine what to display, monitor the pushbutton state and handle calibration tasks. It digitally averages the readings from each analog input pin 2048 times to improve resolution and reduce noise.

When reading microamps or microwatts, some additional time averaging is performed on successive readings, if the readings are fairly steady, to prevent the bottom digit from jumping around due to circuit and power supply noise.

Input pin RE3 is monitored to check if S1 is pressed and if so, the display mode is changed. The current display mode is stored in EEPROM so that if you unplug and re-plug the unit, it retains its mode. This is convenient but we also found that plugging certain USB devices in can cause the USB Power Meter to reset and since it powers back on in the same mode after a reset, the event is barely noticeable (besides a brief period with a blank or frozen display).

The software also contains calibration routines which measure the offset voltage and store it in EEPROM to adjust future measurements. During calibration, you can also correct for errors in the micro's internal 1.024V reference generator (specified as ±7% over the full temperature range). This offset is also stored in EEPROM and it is recommended that you trim this voltage as it also affects current readings, since the 4.096V ADC reference is derived from it.

The software compensates for power lost in the shunt when measuring the power drawn. This is necessary since the USB voltage measured is at the supply side rather than the load. This error is only significant for fairly high readings; eg, readings at 2.5W would be 0.5% high.

Construction

The components are all fitted on a PCB coded 04109121 (65 x 36mm). The LCD module, USB connectors and pushbutton go on one side and everything else on the other.

Start by installing the surface-mount parts. It's best to begin with the three ICs and then follow with the passive components. These are all fairly large for SMDs so you should not encounter too many difficulties.

We've covered SMD soldering on a number of occasions in the past so we will just cover the basics here. For more information, refer to pages 80 & 81 in the June 2012 issue of Silicon Chip.

Start by applying some solder to one of the IC pads and then, using tweezers, slide the part into place while heating the solder on that pad. Remove the iron and check that the part is correctly orientated (pin 1 dot/divot as shown) and that it is properly centred on its pads. If not, re-heat the solder and gently nudge the chip into place. Repeat until it's right and then solder the rest of the pins. Remember to re-fresh the solder on the first pin you soldered when you're finished.

If you accidentally bridge any of the pins, simply use solder wick to clean it up. A dab of no-clean flux paste applied to the bridge beforehand makes it disappear a lot more quickly and easily.

The same basic technique applies for the passive parts although they only have two pads so it's generally much easier and alignment is less critical. The exception is the 50mΩ shunt resistor which has four (small) pads but as long as you line it up correctly and don't use an excessive amount of solder, it should all go smoothly.

Check the shunt resistor carefully with a magnifying glass after you have soldered it, to ensure that the closely-spaced pairs of pads at each end have not been bridged. If they have, use flux paste and solder wick to remove the excess solder.

With all the SMDs in place, flip the PCB over and fit the LCD. First you must bend the pins straight; they are kinked but will not fit through the holes in the PCB until you straighten them. This is easily done with small, straight pliers, one pin at a time. When you're finished, they should leave the LCD module at right-angles and have no kinks.

You can then fit the LCD module into place but be sure to install it the right way around. To do this, first hold the module at an angle to the light so that you can see where the decimal points are – these go towards the bottom of the PCB.

The straightened pins can be tricky to line up with the holes in the PCB so you will probably have to feed them through one at a time. Once you have them all in, push the module down so that it sits flat against the PCB and then solder all the pins.

You can then finish up by installing the USB plug and socket and the pushbutton switch. In each case, these should be pushed down fully onto the board before being soldered. For the

PCBs STENCILS GRAPHICS LCDs CABLES

A member of the Codan group

IMP ELECTRONICS SOLUTIONS

At IMP Electronics Solutions we pride ourselves on providing you with high quality electronics solutions, excellent customer service, and on-time delivery. Our pricing is highly competitive and with our Budget Prototype Panel Service you now have access to the best quality PCBs at an affordable price:

IMP BUDGET PROTOTYPE PANEL SERVICE

2x2 LAYER PANELS

16.4" x 10.4" USEABLE AREA (max per panel)

$399 +GST

6 WORKING DAY SERVICE*

Price includes tooling & setup charges. *Design checks not included.

INCLUDED SPECIFICATIONS:

- Standard Leaded Solder Finish
- 1.6 mm FR4
- Green Solder mask 2 sides
- White component overlay top-side only
- Minimum 0.15 mm (0.006") track and space
- 1 oz copper finish
- Supplied in panel form with break-out tabs

EXTRAS:

Electrical Testing $135 | Immersion Silver $40 | Immersion Gold $85

P: 08 8262 1444 E: sales@imppc.com.au

www.imppc.com.au

USB plug and socket, solder the large mounting pins first and then the four signal pins. The plug goes on the left and the socket on the right. There won't be much of a gap between the LCD and the socket but it should fit.

Testing and calibration

To test the unit, you simply plug it into a USB port. You should immediately see a display on the screen which will read "C5.00" or similar, with the number indicating the sensed USB supply voltage. The decimal point should also be flashing. This indicates that the unit is in calibration mode.

If you don't get such a display, unplug it and check for faults such as bad solder joints or bridged pads.

Assuming it's OK, set your DMM to DC volts and measure the voltage between the "VBUS" and "GND" points on the PCB (top corners). You should get a reading pretty close to that shown on the unit but it may be slightly off.

If it's off, press pushbutton S1 briefly and release it. Shortly afterwards, you should see the reading on the display change slightly. Continue pressing S1, with a pause after each press to check the new reading, until the unit shows the same voltage as your multimeter, to within 10mV. You may need to re-check the DMM reading in case the USB voltage has changed slightly as you approach the correct reading.

Once the display is correct, press and hold pushbutton S1 for several seconds until the display shows "CALI" and then release it. After a couple of seconds, calibration will complete and the unit will display the measured current in milliamps, which should be very close to zero.

Now plug in a USB device (eg, a hub) and check that the reading increases. You can then press the switch to cycle through the current, voltage and power modes (see below) and check that each reading is approximately correct.

Once you are happy that the unit is working and correctly calibrated, you can then trim the heatshrink tubing so that it is about 10mm longer than the PCB, slip it over the unit and apply some gentle heat (from a heat gun on low or a hairdryer) to shrink it. Trim away any excess tubing that protrudes past the ends of the PCB.

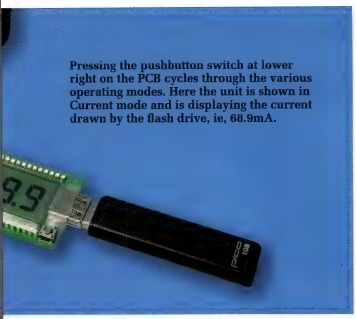

Pressing the pushbutton switch at lower right on the PCB cycles through the various operating modes. Here the unit is shown in Current mode and is displaying the current drawn by the flash drive, ie, 68.9mA.

You can still access the V_{BUS} and GND terminals to re-calibrate it later, if that becomes necessary, through the ends of the tubing. It may then be more convenient to use the USB plug shell as your ground reference point.

Display

During normal operation, there are three modes: current, voltage and power. Pressing S1 briefly cycles through these modes.

In current mode, there are three ranges and the unit switches automatically. Typically, it will read either "x.xxx" or "xxx.x" where x is a digit from 0 to 9. These readings are in milliamps and the lower range (with microamp resolution) is automatically selected for readings below 10mA. For 1A and above, the display changes to "x.xxA".

In voltage mode, the read-out is always in the format "bx.xx" where x.xx will be a number usually between 4.40 and 5.50. "b" is short for "bus voltage" (it's not possible to do a V with a 7-segment display).

In power mode, there are three possible ranges and again it is auto-ranging. For readings 10mW and above, you will get a read-out in watts of either "Px.xx" or "P.xxx", both in watts. Below 10mW, the display will change to "Lx.xx", with the reading in milliwatts. The "L" stands for "low power".

To re-enter calibration, hold down S1 for several seconds. You can then go through the steps above to recalibrate the unit.

Flip mode

If you plug the unit into a left-side USB port, the reading will be upside-down. This can be fixed by holding down S1 while plugging it in, which enables flip mode. The decimal points are now at the top of the display but the digits will be shown the right way up and you can read it as normal. To disable flip mode, you again hold down S1 while plugging the unit in. Otherwise, it will stay in flip mode.

That's it. Now you will no longer be in the dark about the power your USB devices consume. **SC**

CIRCUIT NOTEBOOK

Interesting circuit ideas which we have checked but not built and tested. Contributions will be paid for at standard rates. All submissions should include full name, address & phone number.

Digital thermostat features single-button user interface

Andrew Partridge is this month's winner of a $150 gift voucher from Hare & Forbes

This thermostat unit is based on a PIC16F1827 micro and a DS18B20 temperature sensor and features °C or °F display, a range of -55°C to +125°C (-67°F to 257°F), current temperature display resolution of 0.1°C and an accuracy of ±0.5°C for temperatures between -10°C and +85°C. The switching temperature and hysteresis are adjustable in steps of 1° over the full temperature range of 0-180°C (0-324°F).

You can have Auto (thermostatic) or Manual switching of the controlled output. In Auto mode, the controlled output can be normal or inverted. All settings are adjusted using a single pushbutton switch in conjunction with prompts from the display.

Suppose the user has set the mode to Auto, the switching temperature to 25°C, the hysteresis to 2°C, and the output to be not inverted. The main display at power up will then look something like this:

on>25 off<23
21.2°C OFF

The first line shows that the output relay will be energised when the temperature exceeds 25°C and then stay on until the temperature drops below 23°C. The second line is updated every second and shows the current temperature, the temperature units and the actual state of the controlled output. If the output is set to be inverted, the display would read instead:

off>25 on<23
21.2°C ON

If the mode is set to Manual, the main display is:

Manual
21.2°C OFF

When the main display is showing, a brief press of S1 enters the setting menu sequence. Menus allow the user to view and change the thermostat settings, the display contrast and the displayed temperature units. Briefly pressing S1 while in any of the setting menus skips the menu without making any changes, while pressing S1 for longer than one second changes the setting.

There are two menus for each numerical setting: one which allows the setting to be increased and one which allows the setting to be decreased. Numerical settings increase or decrease at an accelerating rate while S1 is held down, enabling rapid adjustment. The speed of adjustment is indicated by the number of '-' or '+' symbols displayed.

If the user changes a numerical setting in one direction then briefly presses S1, the menu for adjusting that setting in the opposite direction is displayed. This allows any overshoot to be conveniently corrected. A second brief press of S1 advances to the menu for the next setting.

Settings are stored in EEPROM so that the user's most recent selections are restored the next time the unit is powered up. The display contrast is reset to maximum if the unit is powered up with button S1 already pressed. This allows the user to regain control in case the contrast has been set so faint that the display is impossible to read.

A handy shortcut is available while the main display is showing: if the unit is in Manual mode, a long press of S1 will toggle the state of the controlled output, while if the unit is in Auto mode, a long press of S1 will switch from Auto to Manual mode. In Auto mode, the controlled output will continue to be thermostatically controlled regardless of whether the main display or a setting menu is being shown.

The LCD backlight behaves in a similar fashion to a mobile phone backlight. It stays on at full brightness for 20 seconds after power-up and after S1 was last pressed, then is dimmed to 25% brightness for 10 seconds before turning off. Unlike a mobile phone, the purpose of the automatic backlight is not to save power. Rather, if the unit is used in a bedroom, having the backlight switch off allows the room to become completely dark.

Whenever the LCD backlight is dimmed or off, the first press of S1 restores it to full brightness and is not otherwise treated as a command, with one exception: the long press shortcuts from the main display operate regardless of the state of

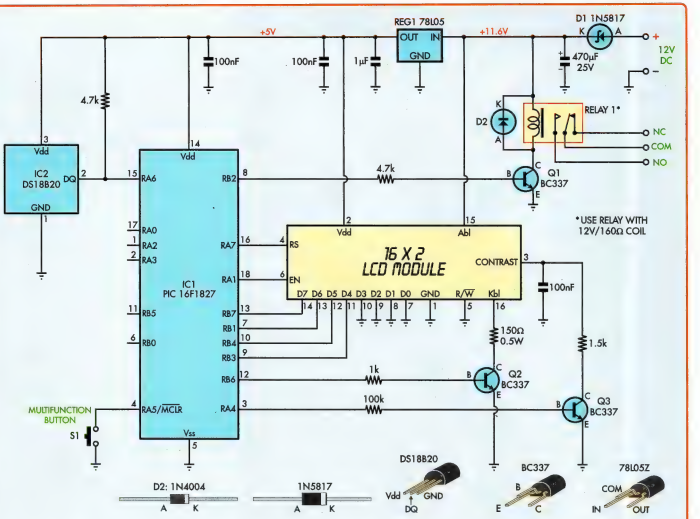

the backlight. If you use a display that has no backlight or if it has a back-light but you want it to stay on permanently, comment out the "#define autosleep" line in the assembly source file.

Switching temperature units

The thermostat switching temperature and hysteresis are always displayed as whole numbers of degrees, whether °C or °F. They are stored in units of 1/16°C regardless of the temperature unit selected for display. Whenever the display unit is changed, the stored values of the thermostat temperature and hysteresis are adjusted slightly so that they are consistent with the displayed values.

For example, if the switching temperature is displaying as 12°C (equivalent to 53.6°F), the stored value is exactly 12.000°C. If the display units are changed to Fahrenheit, the whole number Fahrenheit equivalent to 12°C is 54°F. Since 54°F is equivalent to 12.222°C, the stored switching temperature is changed to 12.250°C, which is within 1/16°C of the correct value. If the display units are then changed back to Celsius, the stored value of the switching temperature changes back to 12.000°C.

Power for the circuit comes via a 1N5817 Schottky diode which protects against reverse polarity. The display backlight and relay are powered from the 11.6V rail to keep the current drawn from the 5V regulator low so that it does not need a heatsink.

The signal at RB6 of the PIC is pulse-width modulated to control the brightness of the backlight via BC337 transistor Q2. Full brightness corresponds to (almost) 100% duty cycle, dimmed is 25% and it is 0% when the backlight is switched off.

The 150Ω current limiting resistor in the backlight circuit was selected for an LCD designed for direct connection to 5V and drawing 44mA. This resistor may need to be changed to suit other LCD modules designed for a different current or without an internal resistor in series with the backlight LEDs.

The display contrast is controlled by a variable current sink based on transistor Q3 and driven by a PWM signal from RA4. The duty cycle of the PWM corresponds to the contrast setting. A 1.5kΩ resistor and 100nF capacitor averages the current over the PWM cycle.

The firmware for the PIC16F1827 is available from the SILICON CHIP website as both an assembly source file and a hex object file. The source is written in PIC assembly language and is comprehensively commented in pseudo-Javascript so it should be straightforward to customise it if required.

Andrew Partridge,
Toowoomba, Qld.

Electronic canary needs no bird seed

If you love the sweet sound of a warbling song bird but do not like to clean the cage, how about an electronic canary? When switched on, the "bird" starts to whistle, going down scale for a moment then breaking into a warble for several seconds. It then stops only to start again in a few more seconds and the cycle repeats.

The circuit is essentially an astable multivibrator combined with a blocking oscillator to cause it to "squegg", ie, vary its oscillation on and off.

Q1 & Q2 form the astable multivibrator with cross-coupling components between their collectors and bases. Q1 also operates as a blocking oscillator with its time-constants mainly determined by the inductance of the primary winding of transformer T1 and the associated capacitors. It is this part of the circuit that produces the "warble".

Q2 also has transformer T2 as its collector load and the secondary drives a small speaker via a low-value resistor. This is shown as 1.8Ω but its value is not critical. T2 has a centre-tapped primary and the transistor drives half the winding.

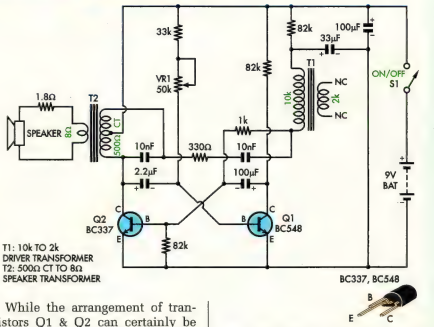

While the arrangement of transistors Q1 & Q2 can certainly be recognised as the familiar astable multivibrator, the configuration is quite non-standard with an 82kΩ resistor tying Q2's base to 0V and Q1's base is tied high via a 33kΩ resistor and potentiometer VR1. The pot is used to vary the basic pitch of the circuit.

In effect though, the circuit will begin operation as a multivibrator, with conduction flipping between Q1 and Q2, but this behaviour will be modified by the varying inductance of transformer T1 and this will cause the blocking oscillator based on Q1 to come into play.

Note that since the circuit is highly interactive, changing one component slightly is likely to cause a significant change in its operation. If you cannot readily purchase the transformers, it should possible to salvage them from an old pocket transistor radio.

Craig Sellen,
Carbondale, PA, USA. ($45)

PICAXE-based roulette wheel

Have all the fun of playing Roulette without the risk of losing your shirt! Or maybe you'd like to set up a mini-casino for family and friends (local laws permitting).

This PICAXE-based circuit uses 36 or 37 LEDs to simulate the famous game. The LEDs are lit one at a time, in chaser fashion, representing a ball rolling around the spinning wheel which slows and eventually stops. An accompanying clicking sound completes the illusion.

This circuit takes advantage of the more flexible digital I/O pin arrangement of the PICAXE20M2 microcontroller compared to its predecessor (the 20M). In this case, the micro (IC1) uses 12 outputs to illuminate the 36 LEDs forming the wheel, one at a time. They are physically arranged in a circle but are wired in a 6x6 matrix.

To illuminate any single LED, one of the shared cathode lines (C0-C5) is driven low and one of the shared anode lines (B0-B5) is driven high.

The LED anodes are driven directly from outputs B0-B5 (pins 13-18) of IC1, while the cathodes are driven from outputs C0-C5 (pins 5-10) via 220Ω current limiting resistors. With a typical LED forward voltage of 2V and a nominal 4.5V supply, the illuminated LED receives about (4.5V - 2V) ÷ 220Ω = 11.3mA. This drops

Issues Getting Dog-Eared?
Keep your copies safe with these handy binders
Available Aust. only. Price: $A14.95 plus $10.00 p&p per order (includes GST). Just fill in and mail the handy order form in this issue; or fax (02) 9939 2648; or call (02) 9939 3295 and quote your credit card number.
REAL VALUE AT $14.95 PLUS P&P

slightly as the battery discharges.

LED37 is optional and represents the zero on the Roulette wheel. Its presence changes the odds of the game slightly in favour of the house. This LED is driven from a dedicated output, B6 (pin 12) and like the others has a 220Ω series current-limiting resistor. Output B7 of IC1 (pin 11) drives the piezo transducer which generates a click each time the "ball" moves to the next number.

To spin the wheel, you simply hold down momentary pushbutton switch S1. This charges the 47µF capacitor up to almost the full supply voltage, via the 220Ω resistor.

When S1 is released, it slowly discharges via its parallel 150kΩ resistor. The voltage across it is buffered by NPN emitter-follower transistor Q1 and its 18kΩ emitter resistor and the buffered voltage is applied to analog input C7 (pin 3) of IC1 where it is measured using IC1's internal analog-to-digital converter (ADC). This measurement then determines how fast the LED chaser spins and the accompanying clicks sound.

When the capacitor discharges below about 0.6V, the voltage at pin 3 of IC1 drops to zero and so the ball stops at whichever position it happens to be in. It's then up to the "croupier" to determine which bets win and how much. You can look up the Roulette betting rules on the internet or in a book on casino games.

The LEDs should be equally spaced in a circle. Each is shown with an associated number and colour. For example, LED1 is 32 (black), LED2 is 15 (red) and so on; refer to the rules to determine the rest. Odd numbers are on a red background, even numbers on black and the zero (if used) on green.

If LED37 (the zero) is used, it goes at the top and then LED1 to its right and so on. Otherwise, LED36 & LED1 go on either side of the top position. If you do install LED37, JP1 should be shorted. Otherwise it is left open.

The circuit is powered from a 4.5V battery (ie, three AA or AAA cells) which are switched by S2. A programming socket is also included on the circuit and the software is available for download from the SILICON CHIP website (roulette_20m2.zip).

Ian Robertson,
Engadine, NSW. ($60)

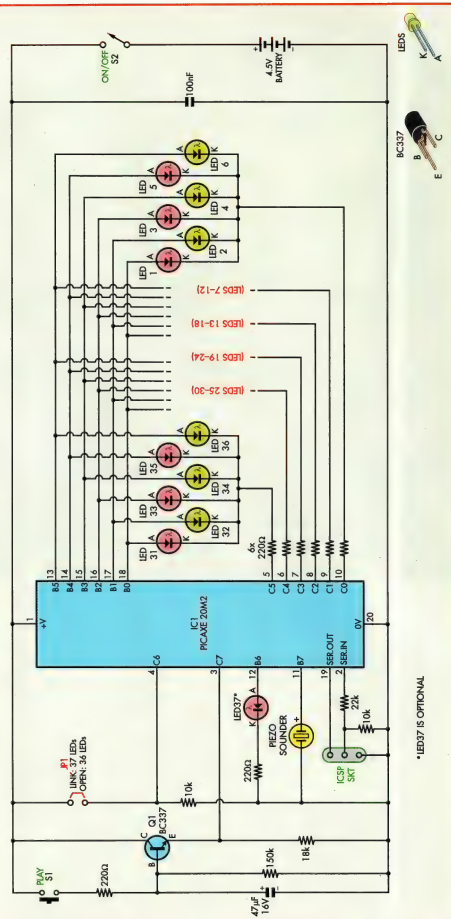

Pt.2: By John Clarke

Six Versions To Suit Your Car's Trigger Input

High-Energy Electronic Ignition System

In Pt.1 last month, we introduced our new High-Energy Ignition System and described its operation. In this article, we give the assembly details for six different versions, to suit your car's trigger input, including an ECU/coil tester version.

THE ELECTRONIC IGNITION is built on a PCB coded 05110121 and measuring 89 x 53mm. This is housed in a 111 x 60 x 30mm diecast aluminium case to give a rugged assembly. Two cable glands, one at either end of the case, provide the cable entry and exit points for the power supply, coil switching and input trigger leads.

The first step is to check the PCB for any defects. You then have to decide which version you are going to build. There are six different versions and it's important to choose the version that suits your car's trigger sensor. For example, if your car has a distributor with a reluctor pick-up, use the layout shown in Fig.5. If it has a Hall Effect or Lumenition trigger, follow the layout of Fig.6.

Similarly, if you are using an existing 5V trigger signal from your car's ECU (electronic control unit), build the layout shown in Fig.10. This is also the version to build if you intend using the unit purely as a coil tester.

Note that the same PCB is used for each version. It's just a matter of installing the relevant input trigger parts to suit your car.

Mounting the parts

Begin the assembly by installing PC stakes at the external wiring points, test points TP1, TP2 & TP GND and at the +5V point (near REG1). The three 2-way pin headers for links LK1-LK3 can then be fitted, followed by the resistors. Table 1 shows the resistor colour codes but you should also check each one using a digital multimeter before soldering it in place.

Follow with the IC socket, making sure it is orientated correctly but don't install the PIC micro yet. The capacitors can then go in (orientate the two electrolytics as shown), then install crystal X1 and the trimpots. Note that the Reluctor version has an extra trimpot (VR3). This is a multi-turn trimpot and it must be installed with its adjusting screw in the position shown.

Regulator REG1 and transistor Q2 (in the Reluctor version) can then go in. Be sure to fasten REG1's tab to the PCB using an M3 x 10mm machine screw and nut before soldering its leads.

IGBT mounting details

Fig.11 shows the mounting details for IGBT transistor Q1. It's secured to the base of the case, with its leads bent at right angles and passing up through the underside of the PCB.

For the time being, simply bend Q1's leads upwards through 90° and test fit

Where To Buy Kits

Both Jaycar and Altronics will have full kits (including the case) available for the High Energy Ignition. The Jaycar kit is Cat. KC-5513 while the Altronics kit is Cat. KC-5513

PCBs: a PCB for the High Energy Ignition can be purchased separately from the SILICON CHIP Partshop.

it to the PCB but don't solder its leads yet. Its tab mounting hole must be clear of the edge of the PCB, as shown in the diagrams.

That done, fit the PCB assembly inside the case and slide it to the left as far it will go, to leave room for Q1. The mounting hole positions for the PCB and Q1's tab can then be marked inside the case, after which the PCB can be removed and the holes drilled to 3mm (hint: use a small pilot drill first).

Deburr these holes using an oversize drill. In particular, Q1's mounting hole must be slightly countersunk inside the case to completely remove any sharp edges. The transistor's mounting area should also be carefully smoothed using fine emery paper. These measures are necessary to prevent the insulating washers which go between Q1's metal tab and the case from being punctured by metal swarf or by a high-voltage arc during operation.

Having drilled the base, the next step is to mark out and drill holes in the case for the two cable glands. These holes are centrally located at either end and should be carefully reamed to size so that the cable glands are an exact fit.

You will also have to drill a 3mm hole for the earth connection in one end of the case. This goes in the end adjacent to the GND connection on the PCB – see photos.

Installing the PCB

Once the case has been drilled, fit 6.3mm tapped Nylon stand-offs to the PCB's corner mounting holes using M3 x 5mm machine screws. That done, the next step is to fasten Q1 in place. As shown in Fig.10, its metal tab is insulated from the case using two TO-220 silicone washers and an insulating bush and it's secured using an M3 x 10mm screw and nut.

Do this screw up finger-tight, then install the PCB in the case with Q1's leads passing up through their respec-

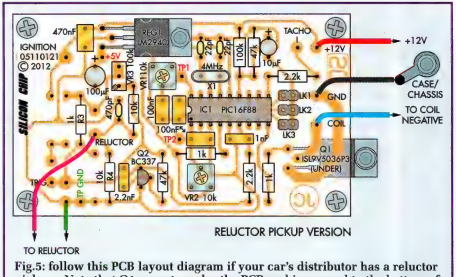

Fig.5: follow this PCB layout diagram if your car's distributor has a reluctor pick-up. Note that Q1 mounts under the PCB and is secured to the bottom of the case using an M3 x 10mm machine screw and nut – see Fig.11.

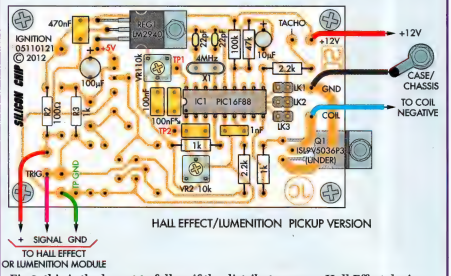

Fig.6: this is the layout to follow if the distributor uses a Hall Effect device or a Lumenition module. Take care with component orientation.

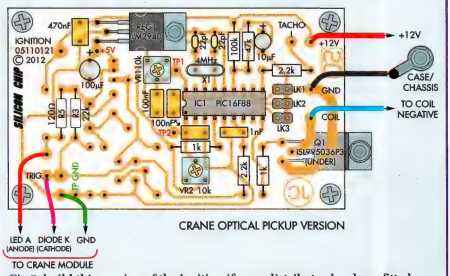

Fig.7: build this version of the ignition if your distributor has been fitted with a Crane optical pick-up.

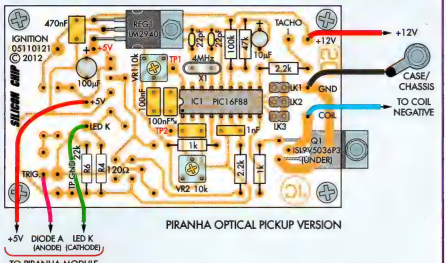

Fig.8: the Piranha optical pickup version is similar to the Crane version but note the different locations for the 22kΩ and 120Ω resistors.

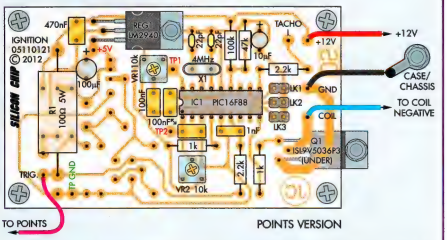

Fig.9: this is the points version. Secure the 100Ω 5W resistor (R1) to the PCB using neutral-cure silicone, to prevent it from vibrating and fracturing its leads and/or solder joints.

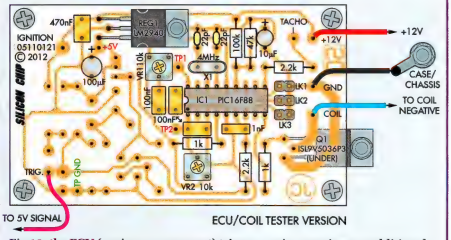

Fig.10: the ECU (engine management) trigger version requires no additional input conditioning circuitry. In this case, the ECU trigger signal goes straight to pin 6 of IC1 via a 2.2kΩ resistor. Build this version also if you only intend using the unit as a coil tester, in which case the 5V trigger input isn't needed.

tive mounting holes. The PCB can now be secured in place using four more M3 x 5mm machine screws, after which you can firmly tighten Q1's mounting screw (make sure the tab remains centred on the insulating washers).

Finally, use your multimeter to confirm that Q1's tab is indeed isolated from the metal case (you should get an open-circuit reading), then solder its leads to the pads on top of the PCB.

External wiring

All that remains now is to run the external wiring. You will need to run leads through the cable glands and solder them to the relevant PC stakes for the power, coil and input trigger connections. **Note that the coil wire is the only wire that's fed through that righthand cable gland (important to prevent interference due to high-voltage switching glitches, eg, by capacitive coupling into the power and trigger leads).**

The remaining leads (with the exception of the earth lead) must all be run through the other cable gland, at the trigger input end of the case.

As shown in the photos, we fitted heatshrink tubing over the PC stake connections, to prevent the wires from breaking. **So before soldering each lead, fit about 6mm of 3mm-diameter heatshrink tubing over it, then slide it over the PC stake and shrink it down after the lead has been soldered.**

The earth connection from the PCB goes to an solder eyelet lug that's secured to the case using an M3 x 10mm screw, nut and star washer. This same screw also secures a quick connect lug on the outside of the case (see photo).

Initial checks & adjustments

Now for an initial smoke test – apply power to the unit (between +12V and GND) and use your DMM to check the voltage between the +5V PC stake and GND. It should measure between 4.85V and 5.25V. If so, switch off and insert the programmed PIC (IC1) into its socket, making sure it goes in the right way around.

You can now do some more tests by connecting the car's ignition coil between the +12V and COIL leads. The unit should be powered from a 12V car battery (or motorcycle battery), with the case connected to battery negative. The coil's HT (high tension) output should be fitted with a paper clip (or similar) which is then positioned so

that it can spark back to the coil's negative terminal over about a 5mm gap.

Before connecting the +12V supply, set the dwell trimpot (VR1) fully anticlockwise and install a jumper on LK2 to enable the spark test mode. That done, apply power and slowly adjust VR1 clockwise. The sparks should start and gradually increase in energy with increased dwell. Stop adjusting VR1 when the spark energy reaches its maximum.

This sets the dwell period to suit your ignition coil. Note that, during the spark test procedure, the spark frequency can be changed using VR2.

Note also that when accelerating, the rapid change in the time between successive firings can cause the dwell to reduce. That's because the micro determines when the coil is to be switched on, based on the previous period between plug firings. During acceleration, this period reduces for each successive firing.

To counteract this reduction in dwell, the software dwell calculation also takes into account the rate of change in the period between firings. This ensures that the initial set dwell period is maintained under normal acceleration. However, you may need to set the dwell to slightly longer than "optimal" (by adjusting VR1 clockwise) to ensure sufficient dwell during heavy acceleration.

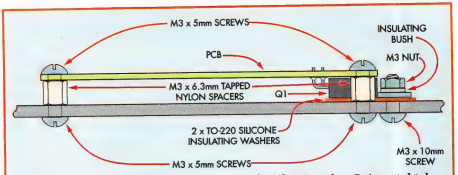

Fig.11: the PCB and IGBT (Q1) mounting details. Note that Q1's metal tab must be insulated from the case using two TO-220 silicone washers and an insulating bush. After mounting, use a multimeter (set to a low ohms range) to confirm that the tab is properly isolated; it must not be shorted to the case.

That completes the dwell adjustment procedure. **Link LK2 should now be removed, so that all three 2-pin headers (LK1-LK3) are open.**

Installation

The Electronic Ignition box should be installed in the engine bay close to the distributor. Make sure that it's well away from the exhaust manifold and the catalytic converter (if fitted), so that it doesn't overheat.

Use brackets and screws to secure the box to the chassis. That done, wire the positive supply lead to the +12V ignition supply, the negative earth lead to the car chassis (if necessary) and the trigger inputs to the trigger unit in the distributor. The coil lead goes to the coil negative, replacing the existing switched negative lead.

If you are using the Reluctor circuit, connect the Reluctor trigger unit, adjust VR3 fully anti-clockwise and measure the voltage at the trigger test point (TP TRIG). If the voltage is close

Table 2: Capacitor Codes

Value	µF Value	IEC Code	EIA Code
470nF	0.47µF	470n	474
100nF	0.1µF	100n	104
1nF	0.001µF	1n	102
22pF	NA	22p	22

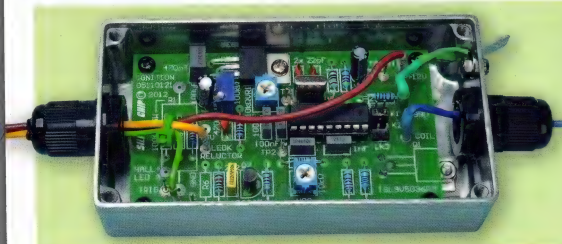

This is the view inside the completed unit (reluctor pick-up version shown). Be sure to build it for good reliability by fitting heatshrink over the solder joints on the PC stakes and by fitting a cable tie to the leads as shown. Note that the lead to the coil negative is the only one that exits through the righthand cable gland.

Table 1: Resistor Colour Codes

❑	No.	Value	4-Band Code (1%)	5-Band Code (1%)
❑	1	100kΩ	brown black yellow brown	brown black black orange brown
❑	1	47kΩ	yellow violet orange brown	yellow violet black red brown
❑	2	2.2kΩ	red red red brown	red red black brown brown
❑	2	1kΩ	brown black red brown	brown black black brown brown

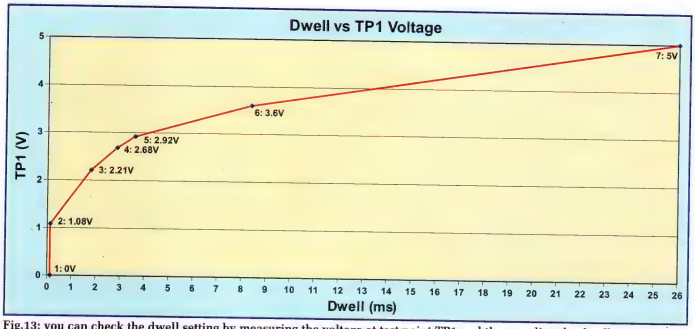

Fig.13: you can check the dwell setting by measuring the voltage at test point TP1 and then reading the dwell period (in milliseconds) off this graph. The dwell is adjusted using trimpot VR1 to give maximum spark energy, as described in the text (see initial checks and adjustments).

to zero, wind VR3 clockwise several turns until the voltage goes to +5V, then wind it another two turns clockwise and leave VR3 at that setting.

Now check that LK1-LK3 are all open (ie, no jumpers installed), then try to start the engine. If it doesn't start, try the invert mode by installing LK3.

If you have a Reluctor pick-up, it's important that the engine fires on the leading edge of the trigger signal. That edge should coincide with the leading edge of each tooth on the Reluctor ring as the distributor shaft rotates, otherwise the timing will usually be so far out that the car won't start. In that case, you can either swap the Reluctor leads or install LK3 as described above.

Once the engine starts, adjust the debounce trimpot (VR2) for best results. This adjustment should be set as low as possible (ie, set VR2 anticlockwise as far as possible). An increased debounce period will be required if the engine runs erratically and it's just a matter of adjusting VR2 clockwise until smooth running is obtained.

If that doesn't do the trick, then the follow mode may be necessary. This is selected using LK1 and will typically be required for badly worn points or worn distributor shaft cam lobes and/or shaft bearings.

Note that, in the absence of trigger signals, the coil switches off after 1s for debounce settings of 2ms and less, or after 10s for debounce periods greater than 2ms. The debounce setting can be measured by connecting a multimeter between TP2 and TP GND. As stated, VR2 sets the debounce period and the calibration is 1ms per 1V.

The quick-connect terminal at the right-hand end of the case provides a convenient connection point for the earth lead.

Ignition coil

For most installations, it's usually best to keep the original ignition coil and ballast resistor (if one is used). If you intend using a different coil, make sure it is suitable, especially if you intend setting the debounce period so that there's a 10s delay before the coil switches off in the absence of trigger signals. In that case, it's important that the coil is able to cope with the continuous current that will flow through it for this period without overheating.

A ballast resistor will prevent excessive current flow through coils that have a low resistance (ie, below 3Ω).

Connecting a tachometer

Finally, the Tacho output (top-right of the PCB) should be suitable for driving most digital tachometers. However, an impulse tachometer will require a signal voltage that's derived from the negative side of the coil. If that doesn't work, try operating the ignition unit in "follow" mode by installing a jumper across LK1. SC

Jaycar Electronics

Better, More Technical

MERRY CHRISTMAS

DECEMBER EDITION

Prices valid until 24/12/2012

4 Ch DVR Kit with 4 x 520TV Line CCD Cameras

Contains multiplexing DVR with Ethernet access, four weatherproof CCD cameras with IR illumination, and four 20m cables. Ideal for any small business or residential location. Allows remote access viewing from anywhere with an internet connection using a web browser or Smartphone.

- 704 x 576 D1 resolution @ 100fps
- 500GB SATA Hard disk • 520TV line cameras
- CCD cameras provide clearer images at night time
- DVR size: 343(W) x 240(D) x 68(H)mm

QV-8108

NEW $799.00

Buy the DVR package & ASUS monitor for $949 SAVE $49

17" ASUS Colour Monitor

High resolution and slimline for surveillance applications.

QM-3577

$199.00

CALOUNDRA, QLD

68 Caloundra Rd
Caloundra QLD 4551
Ph: 07 5491 1000
Parking available!

NEW STORE OPENS 1ST DEC

Gas Soldering Tool Set

A handy gas soldering iron with flame or flameless heat blower function, suitable for general heating, drying, melting, cutting, soldering, heat shrinking etc.

- Adjustable temperature control
- Flame temp: Up to 1300°C
- Power range: 25W to 70W
- Case size: 175(W) x 125(D) x 33(H)mm

TH-1606

NEW $44.95

High-Energy Electronic Ignition Kit for Cars

Use this kit to replace a failed ignition module or to upgrade a mechanical ignition system when restoring a vehicle. Use with virtually any ignition system that uses a single coil with points, hall effect/lumenition, reluctor or optical sensors (Crane and Piranha) and ECU. Features include adjustable dwell time, output or follow input option, tachometer output, adjustable debounce period, dwell compensation for battery voltage and coil switch-off with no trigger signal.

- Kit supplied with silk-screened PCB, diecast enclosure (111 x 60 x 30mm), pre-programmed PIC and PCB mount components for four trigger/pickup options.

KC-5513

NEW $49.95

Due early December

CHRISTMAS BONUS

SPEND $100 IN-STORE & GET MINI DMM (QM-1502) ABSOLUTELY FREE!

While Stocks Last

1 000

Jaycar No. 1 For Helicopters!

Why? We sell more helicopters than anyone else! Our massive range of RC helicopters include spare blades so you are not disappointed on Christmas day, should you or the kids break a blade or tail rotor. We also have plenty of other spare parts available in store and online. Here's two of our range.

- 3 channel
- Built-in Gyroscope
- Suitable for ages 14+

iPhone® Controlled

Control from your iPhone®/iTouch®/iPad® or Android™ Smartphone using free app available on iTunes® or Google Play.

iPhone® not included

- Includes spare blades, connect buckles, tail rotor
- Size: 135mm long

GT-3460

$49.95

Single Blade

Offers great performance, speed and manoeuvrability.

- Includes spare blades
- Remote requires 6 x AA batteries
- Size: 390mm long

GT-3490

$69.95

See full range of helicopters and spare parts in-store or check online.

Wi-Fi Controlled Spy Tank

Have endless hours of fun, sneaking up on your family and friends with our Wi-Fi iPad®/iPhone®/iPod® controlled rover. Features a built-in microphone for live audio streaming, onboard camera for live video stream or to take snapshots. See website for full features.

- Night vision mode via IR illumination
- Range up to 60m • Requires 6 x AA batteries
- Free app via the iTunes® App Store
- Size with antenna: 196(L) x 260(W) x 196(H)mm

GT-3598 *was $169.00*

iPad® not included

$129.00 SAVE $40

Limited Stock. Be quick!

Travellers' Access Point

Simply connect this wireless access point to the Ethernet port (with internet access enabled) provided in your motel room using a CAT5 cable, hook it up to a power source and you now have wireless internet access.

- 802.11n 150Mbps
- Size: 74(L) x 27(W) x 14(H)mm

YN-8332

NEW $29.95

1MHz Handheld Function Generator

Produces sine, square, and triangle waveform signals with output frequency adjustment from 1Hz to 1MHz with maximum amplitude of 8Vpp. Features a function to shift between two frequencies over an adjustable period. With a backlit LCD, inbuilt rechargeable battery, and durable rubber surround it is an ideal instrument for testing on the go or in your workshop.

See website for specifications.

- Size: 114(H) x 74(W) x 29(D)mm

QT-2304 *was $199.00*

$179.00 SAVE $20

2.4GHz Wireless DIGITAL Baby Monitor

100% DIGITAL which avoids interference from other electronic devices. The unit has a built-in infrared night vision for round the clock monitoring.

- 7" LCD colour screen
- High sensitivity microphone
- 2 way communication
- VOX function
- Infrared night vision

QC-3649

NEW $169.00

To order call 1800 022 888 **www.jaycar.com.au**

Jaycar Electronics

GIFT IDEAS FOR ALL

Remote Controlled Gifts

Flying Truck

Send this truck racing down a track to pick up speed before it launches into the air then easily control just like an airplane.

- 60 min charge for up to 8 min flight time
- Requires 6 x AA batteries
- Suitable for ages 8+
- Size: 210mm long

GT-3389 ***was $39.95***

$19.95 SAVE $20

4 Ch 4 Engine UFO

A four-engine, four-rotor flying widget. Each channel and motor on the craft is colour-coded so you can easily identify what makes it go where. 20 minute charge gives about 5 minutes of flight time.

- Built-in rechargeable Li-ion battery
- Remote requires 6 x AA batteries
- Suitable for ages 10+
- Size: 230(Dia.)mm

GT-3782

$39.95

4 Ch Single Blade RC Helicopter

This 4 channel helicopter allows a wider range of movement and has a built-in gyroscope for stability. Equipped with 2.4GHz remote control for more responsive control.

- Single blade
- 3.7V 150mAh Li-Po battery included
- 55 minutes recharge for about 7-10 min flight time
- Remote requires 6 x AA batteries
- Suitable for ages 14 +
- Size: 240mm long

GT-3430

Limited stock. Not available online.

$49.95

1:12 Scale High Speed RC Truggy

Travels up to 18km/h and has a 4WD shaft drive with extra large volume shocks for optimal handling. The high-grip tyres are ideal for sharp corner turns and scaling up hills. Rechargeable battery and charger included.

- 4hr charge for 12 min driving time
- Suitable for ages 14+
- Size: 335(L) x 270(W) x 115(H)mm

GT-3687

Limited stock. Not available online.

$69.95

Water Resistant FM Shower Radio

Water resistant shower radio with spring loaded hanging hook, push button tuning and volume.

- Requires 3 x AA batteries
- Size: 145(L) x 80(W) x 45(D)mm

GH-1873 ***was $29.95***

$24.95 SAVE $5

3kg Kitchen Scales

Easy to use and handy around the kitchen. Measuring up to 3kg, they have a resolution of 1g and a tare function. Weighs in both metric and imperial.

- Requires 2 x AA batteries
- Auto power off
- Size: 145(W) x 210(L)mm

QM-7257

$24.95

Amplifier Stand for iPhone4®

This moulded silicone horn holds your iPhone®4 and amplifies the sound up to 13dB. Fantastic!

Buy 2 for $8 save $11.90

- Colours available pink, white, green and blue

XC-5173 ***was $9.95***

iPhone® not included

$4.95 SAVE $5

Shiatsu Neck Massager

Sooth tired neck muscles with a deep and relaxing massage in the comfort of your home or office. Relieve stress and tension with 3 massage modes - Shiatsu, vibration or Shiatsu & vibration.

- Heat mode
- Mains powered
- Size: 340(L) x 300(Dia.)mm

GH-1764 ***was $79.95***

$59.95 SAVE $20

Bubble Blow Machine

Simply insert the included bottle of liquid bubbles into the reservoir and watch as it produces a consistent stream of bubbles with a click of the trigger. It also has LED lights to add a more fascinating effect.

- 100ml. bubble liquid included
- 3 x AA Batteries required
- Suitable for ages 3+
- Size: 160(L) x 150(H) x 55(W)mm

AB-1230

$9.95

Deluxe Soap Dispenser

Automatically dispenses a measured amount of liquid soap when you put your hands under it. No more touching soap bottles which reduces the risk of transferring germs.

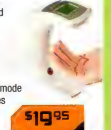

- LCD with auto cleaning mode
- Requires 3 x AA batteries
- Size: 195(H) x 85(W) x 160(D)mm

GH-1188 ***was $29.95***

$19.95 SAVE $10

Kitchen Voice Recorder

Use it for shopping lists or even to record the ingredients in those quick cooking commercials. Strong magnetised backing.

- 3 folders up to 50 messages
- Digital clock
- Requires 2 x AA batteries
- Size: 130(L) x 66(H) x 17(W)mm

XC-0249

$34.95

Wireless "Object Locator"

Simply press the master transmitter (colour coded) and the lost item beeps back. Connect receivers by double sided tape or lanyard to help find frequently misplaced items. 1 x keyfob transmitter and 3 x separate receivers included.

- Transmitter size: 60(L) x 32(W) x 7(D)mm

XC-0354

$29.95

Gifts Under $20

Coughing Lung Ashtray

Place in a cigarette and it bursts into a realistic coughing and screaming fit.

- Requires: 2 x AA batteries
- Size: 130(W) x 115(L) x 45(H)mm

GH-1330

Limited stock. Be quick!

$9.95

Buy 2 for $15 save $4.90

Pole Dancer LCD Alarm Clock

Look forward to waking up every morning with your personal pole-dancer who goes into her routine with light show and funky music.

- Requires 3 x AA batteries
- Backlit LCD
- Snooze function
- Size: 120(W) x 200(H) x 100(D)mm

GE-4079

Limited stock. Not available online.

$14.95

Interactive Music Quiz

Test your family and friends music knowledge with this interactive music quiz that you control! Game options include 'name that track', 'beat the intro', 'name the artist' and 'sing the next line'. Or make up your own game - the possibilities are endless!

- Speaker console with four team buzzers and LCD points display
- Requires 3 x AA batteries
- Suitable for ages 8+

GE-4233

$19.95

To order call 1800 022 888

All savings based on Original RRP. Limited stock on sale items. Prices valid until 24/12/2012.

SAFE & SECURE THIS CHRISTMAS

Dummy Cameras with Flashing LED

Fake but realistic-looking cameras with high brightness flashing red LED to discourage thieves.

- CCTV sticker included (110 x 110mm)

CCTV

Dome Camera

- Requires 2 x AA batteries
- Camera size: 127(Dia) x 90(H)mm

LA-5332

NEW $14.95

Dummy Wireless Camera

- Requires 3 x AA batteries
- Camera size: 155(L)x 60(W) x 50(H)mm

LA-5334

NEW $14.95

DVR and CCD Camera Kit

Package includes digital recorder, four weatherproof CCD colour cameras, and 500GB of storage for over 300 hours continuous video recording. With the help of a free app* for Smartphone/iPhone® or the internet, you can log into a system from anywhere to view live and/or recorded footage. See website for full specifications.

- H.264 video compression
- Up to 704 x 576 pixel (D1) resolution
- 420TV line CCD cameras
- Power supply and 4x 20m cables included
- DVR size: 343(L) x 59(W) x 223(H)mm

QV-8106 ***was $749.00***

Limited Stock. Not available online.

$649.00 SAVE $100

Notebook/Laptop Security

A notebook security cable with four digit combination that can be customised for security.

- 1.8m long
- Steel lock mechanism

XC-4639 ***was $14.95***

$9.95 SAVE $5

Spy Gadgets

LED Flashlight with HD Video Camera

A compact HD video camera with a built-in LED flashlight. Video can be recorded at 720p and the LEDs enable night time and low-light recording. It also takes photos, accepts a MicroSD card (up to 32GB - not included) and can be used as a USB storage device. Handy tool for security guards!

- MJPEG video compression
- AVI recording format
- Size: 111(L) x 32(D)mm

QC-8010 ***was $129.00***

$69.00 SAVE $60

3MP Mini HD Digital Video Camera

Ultra portable, compact HD video camera and recorder with 2GB of internal memory that will hold up to 50 minutes of video (20 minutes in HD) or over 3000 photos. Recharges via USB and will gives about 4 hours of use.

- 350mAh rechargeable battery included
- Supports up to 32GB MicroSD card
- Size: 23(H) x 78(H) x 14(D)mm

QC-8005 ***was $119.00***

$69.00 SAVE $50

Portable Aluminium Car Safe

Keep personal belongings secure and protected. Perfect for protecting mobile phone or GPS while parked at the shops or overnight at the airport etc.

- Weight: 1.3kg
- Size: 210(L) x 150(W) x 68(H)mm

HB-5455

$24.95

iPhone® and cash not included.

Plug & Play IP Camera

Easy to install and features a resolution of 640 x 480 pixels, built-in microphone for audio monitoring, and allows you to control up to 16 cameras through the included software.

- Plug & play
- Easy access to the camera via the internet
- Sizes: 125(L) x 75(W) x 35(H)mm

QC-3397 ***was $179.00***

$69.00 SAVE $110

Time Lapse Video Camera

Create amazing time lapse videos in HD! Frame the subject using the LCD viewfinder and 120° rotatable lens, set the time interval between 1 sec to 24 hours, then start capturing. The video created on the included 2GB SD card can be played back on a computer, media player or suitable TV. Power by 4 x AA batteries (included) or from the USB port of a computer (USB cable required).

View demo videos on our website

- 1280 x 720 resolution
- 1.44" colour TFT screen
- Size: 106(H) x 64(W) x 46(D)mm

QC-8034 ***was $249.00***

$199.00 SAVE $50

Accessories to suit:

Motion Sensor NEW QC-8035 $69.95

Weather Proof Housing NEW QC-8037 $59.95

Pouch NEW QC-8039 $29.95

Car Alarm with Voice Function

An affordable car alarm that features voice feedback on alarm status and operational parameters such as open doors etc.

- Includes electronic black box controller, shock sensor, ignition cutout relay, speaker siren, wiring iooms, bonnet pin switch, car charger for the remote controls, extra circuits for fuel and ignition cutout, 2 x code hopping remote control units with a built in torch

LA-9003

$99.00

Also available:

Spare remote LA-9004 $37.95

Remote Keyless Entry

Upgrade your central locking to include remote keyless entry. Easy to install and comes with two remote key fobs.

LR-8839

$49.95

Spare remote control available separately LR-8837 $19.95

All Set For The Party Season!

Linkable Party Lights

Glam up a party with these iinkable blue, amber and red LED party lights. They'll switch in time with the beat and the microphone sensitivity and light chaser speed are fully adjustable.

- Mains powered

$49.95

3 LED Light

- Size: 140(L) x 130(W) x 480(H)mm

SL-2911 $49.95

6 LED Light

- Size: 350(L) x 130(W) x 360(H)mm

SL-2913 $79.95

Party Light Set

Liven up your next party with this disco lighting set. Easy to operate.

Pack contains:

- 20cm (8") mirror ball
- Mirror ball motor (240VAC) 3 RPM
- PAR 36 spotlight (240VAC)
- 4 x coloured filters in red, amber, green and blue

SL-2978

$84.95

Laser Show

With both red and green laser beams it displays multiple patterns which can be changed automatically, with sound activation, or using the included remote control.

- 9VDC plugpack included
- Size: 270(L) x 215(W) x 115(H)mm

SL-3439

$119.00

Happy Christmas from Jaycar

www.jaycar.com.au

HOLIDAY ROAD TRIP

Solid LED Waterproof Spotlight

The light draws only 12W of power to provide a light output equivalent to a 120W halogen spotlight and visibility up to 250m ahead of you. This LED spotlight is built tough to perform under extreme conditions. IP68 rated, it's shockproof, dustproof and waterproof.

- 50,000+ hours life span
- Lumen output: 1430
- Power: 12W
- Size: 80(W) x 110(H) x 80(D)mm

SL-3911

NEW $129.00

3 Way Cigarette Lighter Splitter with USB

Plug into your car's cigarette lighter socket to convert a single outlet it into a triple 12VDC power socket. Adjustable angle and has USB port to charge your iPhone® or other USB gadget.

- LED indicator
- 1 x 5VDC 500mA USB port
- Size: 115(W) x 32(H) x 111(D)mm

PS-2124

NEW $14.95

Keep the Kids Entertained

7" TFT Colour Monitors with Headrest & DVD Player

This system not only plays DVDs, but also your video files such as DivX, MPEG4, etc, and even play videos on your USB stick or SD card. You can also connect an Xbox360® or Playstation3® via the AV input. Includes an in-built games system (games CDs included), two games controllers and IR remote control.

- Resolution: 1440 x 234 (16:9/4:3 selectable)
- Power: 12VDC
- Dark grey leather-look upholstery
- Headrest size: 280(W) x 200(H) x 110(D)mm

QM-3776

$199.00

BUY BOTH FOR $299 SAVE $39

7" TFT Colour Monitor with Headrest

If you already have a DVD player or other video source in the car you can set this up as an extra monitor for a complete in-car video entertainment system. Features a 7" TFT screen, two composite video inputs and IR remote control and is identical in appearance to the QM-3776 (above) making them an excellent "pair".

QM-3766

$139.00

CHRISTMAS BONUS

SPEND $100 IN-STORE & GET MINI DMM (QM-1502) ABSOLUTELY FREE!

While Stocks Last

Bluetooth® Motorcycle Headset

Communicate wirelessly whilst riding your motorcycle. It enables you to pair two devices simultaneously, such as two mobile phones, or a mobile phone and another AR-1864, giving you an intercom between rider and pillion. IPX6 certified for use in all weather conditions.

- Large buttons
- GPS support and velcro pieces included

AR-1864 *was $99.00*

$79.00 SAVE $20

Helmet not included

GPS/GSM Tracking Device

Locate personal belongings using your phone. To operate, insert a GSM sim card (not included), charge and complete the initial setup. Send an SMS to the locator from your phone and it will return an SMS with GPS coordinates or a link to Google Maps™ if you are using a Smartphone. See website for more features.

- Rechargeable and compact
- USB cable and car charger included
- Operates for up to 3 days between charges
- Size: 61(L) x 42(W) x 11(D)mm

LA-9013

$149.00

Alcohol Breath Tester

Measures up to a blood alcohol level of 0.2% with a response time in less than 8 seconds. Give a reading in blood alcohol percentage or mg/litre. Requires 2 x AAA batteries.

- Size: 103(L) x 37(W) x 19(H)mm

QM-7298

$19.95

NOTE: This product is intended to give an indicative reading only and is carries no guarantee of accuracy. Jaycar accepts no responsibility for any consequence arising from the use of this device.

In-Car Entertainment

In-Dash MP3 Player with Radio

Listen to your favourite MP3s directly from the USB/SD card slot. Featuring PLL tuner with 18FM/12 AM presets, and MP3/WMA playback you will never miss a beat with this in-dash MP3 player.

- Front USB and SD card slot
- Max 16GB USB, 8GB SD (support HC cards)
- 4 x 20WRMS power output
- 2 channels x 2V line-out

QM-3781

$79.00

Bluetooth® Hands Free Car Kit

A cost effective solution for hands free mobile phone use with built-in speaker and microphone, adjustable volume and echo cancellation for clear calls. Much cheaper than getting fined!

- Size: 56(Dia.) x 25(H)mm

AR-3121

$29.95

GPS Sunshades

Simply clip to the top of your GPS unit. Different types to fit popular in-car GPS models. GPS not included.

Universal Sunshade 3.5"

HS-9005 *was $14.95 now $7.95 save $7.00*

Sunshade for TomTom 4.3"

HS-9006 *was $19.95 now $7.95 save $12.00*

Sunshade for Garmin 4.3"

HS-9007 *was $19.95 now $7.95 save $12.00*

$7.95 EA SAVE $7

Touchscreen Car Multimedia Player

Plays all the popular AV formats from just about any portable media or mass storage device. Features a user-friendly touchscreen menu to easily select and control several input play options and bluetooth-ready for handsfree communication.

- Motorised 7" LCD (480 x 234 pixels)
- 22WRMS x 4 channels (45W max each)
- Front panel USB, SD & aux-in
- 1 x rear camera input, 1 x video output

QM-3789

$369.00

0.5W 80 Ch UHF Transceiver

This lightweight hand-held transceiver is suitable for professional and recreational activities.

- Up to 5km range
- 0.5W output
- Requires 3 x AAA batteries
- Size:115(H) x 65(W) x 35(D)mm

DC-1021

$49.95

2W 80 Ch UHF Transceiver

A stand-alone transceiver for professional and leisure activities. 2W output provides up to 10km range. Features CTCSS, 80 channels, plus a rechargeable Li-ion battery with a plug pack charger.

- Hi/Lo power output
- Backlit LCD
- Size: 152(L) x 60(W) x 30(H)mm

DC-1049

$99.95

All savings based on Original RRP. Limited stock on sale items. Prices valid until 24/12/2012.

CHRISTMAS CAMPING & CARAVANNING

Camping Gear

12V Car Kettle

Simply plug into your car's cigarette lighter socket and boil away. Holds up to 550ml and makes up to 4 cups of tea, coffee, soup or any other hot beverage.

- 2 cups, strainer and mounting bracket included
- Size: 235(H) x 95(Dia.)mm

GH-1380 ***was $17.95***

$9.95 SAVE $8

12V Portable Stove

Cooks, warms or reheats up to 125°C. Deep lid design, with a case and carry handle made from durable ABS plastic.

- Size: 265(L) x 180(W) x 155(H)mm

YS-2808 ***was $49.95***

$29.95 SAVE $20

Portable Camping Shower

Battery powered so you can use it almost anywhere. Drop the submersible pump into a clean water supply, hang the shower head in a convenient location, and you're ready to wash!

- Requires 4 x D batteries
- Hose length: 2.5m

YS-2802

$49.95

Portable Ceiling Fan and Light

Designed for use while camping. Simply hang it anywhere you require airflow, turn it on, and chill out! Features soft foam blades for safety, two fan speeds, and built-in LED downlight.

- Requires 4 x D batteries
- Size: 220(Dia.) x 145(H)mm

YS-2804

$34.95

Outdoor TV Antenna for Caravans

Digital ready outdoor antenna perfect for caravans. Use the included remote control to rotate the antenna for the best signal without the need to get up on the roof. Receives UHF & VHF signals.

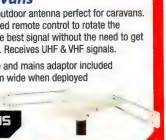

- 8m TV cable and mains adaptor included
- Size: 750mm wide when deployed

LT-3143

$59.95

12V Digital Set Top Box

Great for use on the road, this high definition set top box will pickup all the digital channels on offer in the area. You can also plug in a USB flash drive and record TV in MPEG2 format to watch at a later date.

- Output: HDMI, Composite, RF
- Cigarette lighter cable included
- Size:154(W) x 117(D) x 40(H)mm

XC-4921

$69.95

Caravan Roof Lights

Easy way to provide illumination in your caravan or motorhome. 12VDC LED powered rooflight. Easy to install and operate.

FROM $29.95 SAVE $5

19 LED*

- Size: 147(Dia.) x 36(H)mm

SL-3446 ***was $34.95 now $29.95 save $5.00***

24 LED

- Size: 213(L) x 66(W) x 41(H)mm

SL-3447 ***was $44.95 now $39.95 save $5.00***

*Limited stock. Not available online.

High Brightness Torches

Produces powerful white light without the excessive power consumption. Encased in rugged aircraft-grade aluminium that will withstand the rigours of constant use.

- Multiple light modes

$29.95 SAVE $20

250 Lumen CREE® LED Torch

- Adjustable beam
- Requires 3 x D Batteries
- Size: 250(L) x 54(Dia.)mm

ST-3455 ***was $49.95***

750 Lumen X-Glow LED Torch

- Powered by a quad-die CREE® MC-E LED
- Requires 4 x D batteries
- Size: 355(L) x 52(Dia.)mm

ST-3451 ***was $99.00***

$59.00 SAVE $40

Multi-Purpose LED Lamp

The lamp doubles up as a lantern or a pendant light. Convert the handle to a stand and use as a desk lamp. Great for your next camping adventure!

- 100 lumens
- Solar charging time: 8 hours
- Solar panel: 1.7W 6V 280mA
- Size: 172(L) x 101(W) x 75(Dia.)mm with bracket

SL-2701

NEW $39.95

Solar Rechargeable LED Spotlight

Uses 3W LED for a maximum of 140 lumens of light. This spotlight has a dual position swivel handle and a high tech solar panel to charge the battery. Perfect for car, boat, camping or fishing trip. Includes mains and 12V chargers.

- Weatherproof
- Size: 175(L) x 120(W) x 150(H)mm

ST-3312

$39.95

Pure Sine Wave Inverters

Suitable for use in permanent installations such as caravan, 4WD, camper or even marine and recommended when powering sensitive electronics and motor-powered devices. They range in power from 180 to 600 watts and tested for their durability and design. All models have a USB port for powering your USB gadgets.

- 12VDC to 230VAC power
- USB output: 5VDC @ 500mA

FROM $169.00 SAVE $20

180W Pure Sine Wave Inverter

- Size: 240(L) x 119(W) x 60(H)mm

MI-5160 ***was $189.00 now $169.00 save $20.00***

380W Pure Sine Wave Inverter

- Size: 240(L) x 119(W) x 60(H)mm

MI-5162 ***was $239.00 now $199.00 save $40.00***

600 Watt Pure Sine Wave Inverter

- Size: 300(L) x 119(W) x 60(H)mm

MI-5164 ***was $349.00 now $299.00 save $50.00***

See full range of pure & modified inverters in-store or check online.

12V Amorphous Solar Panels

Quality panels with a strong aluminium frame, plastic corners, and a protective clear glass front. Range from 2W to 40W suitable to charge 12V batteries.

FROM $19.95 SAVE $10

2W

- Size: 160 x 313 x 22mm

ZM-9024 ***was $29.95 now $19.95 save $10.00***

4W

- Size: 465 x 313 x 22mm

ZM-9026 ***was $49.95 now $39.95 save $10.00***

10W

- Size: 923 x 313 x 22mm

ZM-9030 ***was $89.95 now $79.95 save $10.00***

15W

- Size: 973 x 313 x 18mm

ZM-9045 ***was $129.00 now $99.00 save $30.00***

40W*

- Size: 1255 x 645 x 40mm

ZM-9034 ***was $299.00 now $229.00 save $70.00***

*Limited stock. Not available online.

ZM-9030

ZM-9034

POWER & TECHNOLOGY

Footswitch-Operated Mains Outlet

Simply connect any mains operated device to the GPO and turn it on or off remotely from up to 2.8m away. Ideal for the electric guitar or disabled.

MS-6144 ***was $29.95***

$19.95
SAVE $10

Mains Standby Power Saver with IR Receiver

This energy saving device eliminates the standby power consumed by most modern appliances. Simply program the power saver with the standby level for your system and it will shut the power off whenever the set level is reached. Program any IR remote control to turn the power saver on again for simple and effective operation.

- Size: 128(H) x 65(W) x 40(D)mm

MS-6146 ***was $29.95***

$19.95
SAVE $10

CAN'T DECIDE WHAT TO BUY?
GIVE A JAYCAR GIFT CARD
gift card
Jaycar Electronics

Mains Power Monitor with PC Connection

Monitors the energy consumption of an entire home to determine how much electricity the appliances use. Displays power, cost, CO_2 and temperature.

- 433MHz wireless transmission up to 40m
- Includes 2 x D batteries for transmitter
- Display unit uses mains power or requires 3 x AAA batteries
- Max sensor current: 100A

MS-6165 ***was $119.00***

$89.00
SAVE $30

Rotating Surge Protector

Features a 90° rotating design for easy GPO switch access and two USB charging ports (2.1A total) for charging Apple® and other power demanding devices. Also has a higher surge protection than many other powerboards.

- 240VAC 10A, 2400W rated
- Size: 112(H) x 57(W) x 42(D)mm

MS-4027 ***was $29.95***

$24.95
SAVE $5

Remote Controlled Powerboard

Great for turning on and off devices in hard to reach areas like behind TVs, Hi-Fi cabinets, desks etc. Control up to 4 mains appliances individually.

- One-touch synchronisation
- Overload, surge and spike protection
- 10A, 2400W total load

MS-6150 ***was $59.95***

$49.95
SAVE $10

Surge/Overload Protected Powerboards

Always keep your mains equipment protected! These powerboards provide power overload and surge protection and are perfect for home theatre, PC, AV systems etc.

- Extra-wide spacing on end socket to take mains plug packs
- Individually switched

4-Way MS-4064 $19.95
6-Way MS-4066 $24.95

FROM
$19.95

Android™ Smart TV Media Player

Access websites, install and run Android™ apps Facebook®, Twitter®, MSN® and YouTube® all on your TV. Play movies from your USB hard drive or connect to a shared drive over your network. See website for full specs.

- HDMI or composite connection
- Built-in Android™ 2.3 operating system (Upgradeable to Android™ 4.0, see website for more details)

XC-4208 ***was $169.00***

$149.00
SAVE $20

Limited stock. Be quick!

USB to Smartphone Connector

Connect to an Apple® device, or anything with a micro or mini USB socket.

- T-shaped end with USB mini and micro plug on either side
- Apple® connector to piggy back off the micro USB plug
- Cable length: 1.1m (approx)

WC-7691

$19.95

2.4GHz Wireless Keyboard & Mouse

An all-in-one wireless keyboard and mouse solution perfectly suited to home or office PC applications. Features Qwerty keyboard and an ergonomically designed precision mouse with scroll wheel.

- Size: 435(L) x 125(W) x 18(H)mm

XC-5174 ***was $24.95***

$19.95
SAVE $5

USB Powered PC Speakers

Use with laptops, desktop PCs or mobile music players. Contemporary, space saving design with plug and play functionality.

- USB powered
- Power output: 1.8WRMS
- Size:154(H) x 75(W) x 36(D)mm

XC-5191

$14.95

Mains Laptop Power Supplies

Suitable for most laptop models. See website for full range and compatibility.

120W Universal Automatic

- 5 - 24VDC
- 13 plugs
- Size: 141(L) x 63(W) x 32(H)mm

MP-3328 ***was $129.00***

$99.00
SAVE $30

144W Universal Automatic

- 15 - 24VDC
- 16 plugs
- Size: 158(L) x 63(W) x 37(H)mm

MP-3473

Limited stock. Be quick!

$89.00

All-In-One Card Reader

Supports SD, MMC, MS and CF formats including Micro-drive. See website for full list.

- Plug and play
- USB 2.0
- Size: 60(L) x 40(W) x 13(H)mm

XC-4849 ***was $24.95***

$19.95
SAVE $5

Wireless Network Adaptor

Add 802.11n wireless capability to your computer. Supports transfer speeds up to 300Mbps. A secure, sleek and convenient networking upgrade for the home or office.

- Compatible with Windows, Linux and MAC OSX
- Size: 58(L) x 26(W) x 9(H)mm

YN-8307

$29.95

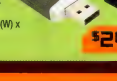

4-Port USB 3.0 Hub

Provides 4.8Gbps data rate and significantly faster than USB 2.0. Includes USB3.0 lead and mains plaugpack.

- 4 port
- Windows compatible
- Size: 85(L) x 32(W) x 18(H)mm

XC-4947 ***was $69.95***

$59.95
SAVE $10

To order call 1800 022 888

All savings based on Original RRP. Limited stock on sale items. Prices valid until 24/12/12.

TOOLS & COMPONENTS

Digital Storage Oscilloscopes

Treat yourself this christmas

- USB interface
- Full colour TFT display
- Includes 2 x 10:1 probes, EasyScope software and USB cable

25MHz Dual Channel

An ideal DSO for the advanced hobby user or technician and is particularly suited to audio work. See online for more details.

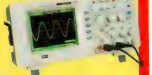

- 145mm colour TFT LCD
- Size: 310(W) x 150(H) x 130(D)mm

QC-1932 ***was $599.00***

$499.00 SAVE $100

100MHz Dual Channel with 7" Screen

Enhanced performance, professional level test instrument for the technician, design engineer or development laboratory. Includes a carry bag. See online for more details.

- 178mm colour TFT LCD
- Size: 340(W) x 150(H) x 110(D)mm

QC-1934 ***was $1149.00***

$999.00 SAVE $150

Adaptors

PA-0622

FME Socket to SMA Socket Adaptor
PA-0620 $4.95

SMA Plug to SMA Plug Adaptor
PA-0622 $4.95

BNC Plug to PL259 Socket Adaptor
PA-0681 $3.95

PA-0681

18 Piece Mixed Bit Set

A collection of commonly used driver bits in a handy rubber edged case. Features a bit locking mechanism for stable driving. Driver not included.

- Stainless steel
- Case size: 115(L) x 50(W) x 31(D)mm

TD-2111 ***was $29.95***

$24.95 SAVE $5

Speed Control Kit for Induction Motors

Ref: Silicon Chip Magazine May 2012

Control induction motors* up to 1.5kW (2HP) to run machinery at different speeds or controlling a pool pump to save money. Also works with 3-phase motors. Full form kit includes case, PCB, hardware and electronics. Soldering and construction required.

KC-5509

NOTE: *Does not work for motors with centrifugal switch

$229.00

Universal Drill Press Stand

Convert your standard power drill or rotary tool into a drill press with this adjustable stand. Built-in press depth gauge for accurate drilling and adjustable limiting brace.

- Drilling depth: Up to 60mm
- Size: 497(H) x 350(W) x 160(D)mm

TD-2463

Drill not included

NEW **$29.95**

Handheld Pocket Oscilloscope

A compiete portable oscillioscope! Aside from standard scope features, it has nifty tools for measurement of RMS speaker power, display hold function, and memory storage for 2 signals. Housed in a durable rubber surround with backlit LCD display and intoulit Ni-MH battery. See our website or in-store for full specifications.

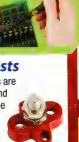

- 10MHz, rechargeable
- CRO probe and USB charge cable supplied
- Size: 114(H) x 74(W) x 29(D)mm

QC-1914 ***was $249.00***

$199.00 SAVE $50

Power Distribution Posts

These heavy duty stainless steel posts are mounted on a moulded piastic base and are available in three versions available to suit a variety of power distribution applications.

SZ-2090

- Stainless steel
- Size: 45(W) x 43(L) x 35(H)mm

NEW **$9.95** EA

Single M10 Post
SZ-2090 $9.95

SZ-2094

Twin M8 Post with Bridging Plate
SZ-2092 $9.95

Twin M6 Post with Bridging Plate
SZ-2094 $9.95

SZ-2092

USB Power Monitor Kit

Ref: Silicon Chip Magazine December 2012

Plug this kit inline with a USB device to display the current that is drawn at any given time. Check the total power draw from an unpowered hub and its attached devices or what impact a USB device has on your laptop battery life. Displays current, voltage or power, is auto-ranging and will read as low as a few microamps and up to over an amp. Kit supplied with double sided, soldermasked and screen-printed PCB with SMD components pre-soldered, LCD screen, and components.

- PCB dimensions: 65 x 36mm

KC-5516 Due mid December

NEW **$59.95**

CHRISTMAS BONUS

SPEND $100 IN-STORE & GET MINI DMM (QM-1502) ABSOLUTELY FREE!

While Stocks Last

60 Piece Rotary Tool Bit Set

All the bits you need for your rotary tool to grind, polish, cut, sand or clean. Housed in a durable case with transparent lid and carry handle. See website for full contents.

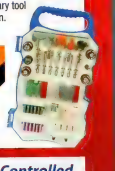

$5.95 SAVE $4

- Case size: 220(L) x 130(W) x 45(D)mm

TD-2457 ***was $9.95***

40W Temperature Controlled Soldering Station

An ideal entry-level soldering station for the hobby user. Comes with a lightweight iron with anti-slip grip and tip cleaning sponge, temperature adjustment from 150°C up to 450°C.

- 40W power
- Size: 135(L) x 82(W) x 70(H)mm

TS-1620

$59.95

Spare 0.5mm conical tip: TS-1622 $8.95

High Performance 250WRMS Class-D Amplifier Kit

Ref: Silicon Chip Magazine Nov and Dec 2012

High quality amplifier boasting 250WRMS output into 4 ohms, 150W into 8 ohms and can be bridged with a second kit for 450W into 8 ohms. Features include high efficiency (90% @ 4 ohm), low distortion and noise (<0.01%), and over-current, over-temperature, under voltage, over-voltage and DC offset protection. Kit supplied with double sided, soldermasked and screen-printed silk-screened PCB with SMD IC pre-soldered, heatsink, and electronic circuit board mounted components.

- Power requirements: +/- 40 to 60VDC, 50 to 55V nominal (see KC-5471)
- S/N ratio: 103dB
- Freq. response: 10Hz - 10kHz, +/- 1dB
- PCB dimensions: 117 x 167mm

KC-5514

NEW **$89.95**

Due mid December

Also available:

Stereo Speaker Protector Kit to suit NEW
KC-5515 $29.95

+/- 55V Power Supply Kit to suit
KC-5471 $29.95

TAKE ADVANTAGE OF THE SUN

Monocrystalline Solar Panels

A range of efficient solar panels with reliable performance using tampered glass and aluminium frame. Size range from 80W to 175W. Fitted with junction box. See our website for more information.

POWERTECH

12V 80W	ZM-9097 $289.00	*Buy 2 for $400 SAVE $178*
12V 90W	ZM-9086 $325.00	*Buy 2 for $450 SAVE $200*
12V 120W	ZM-9098 $425.00	*Buy 2 for $600 SAVE $250*
*24V 175W**	ZM-9099 $499.00	*Buy 2 for $900 SAVE $98*

*Limited stock. Not available online.

ZM-9097

FROM $289.00

ZM-9098

See full range of solar panels in-store or check online.

Solar Powered Water Pumps

Run your outdoor aquarium, garden pond or water feature from the sun. Eliminates wiring and the un-safe aspects of electricity near water. Both include a solar panel, 2m cable and pump assembled and ready to use.

- Pump assembly: 42(L) x 39(W) x 28(H)mm

7V 900mW 140L per hour
- Panel size: 188(L) x 155(W) x 25(H)mm

ZM-9200 *was $49.95*

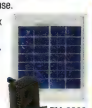
ZM-9200

$39.95 SAVE $10

12V 2.4W 200L per hour
- Panel size: 308(L) x 166(W) x 25(H)mm

ZM-9202 *was $99.95*

ZM-9202

$79.95 SAVE $20

FERNTREE GULLY, VIC

815 Burwood Highway

PH. (03) 9758 5500

Parking available

NOW OPEN!

200W 12VDC Wind Turbine

Always at the forefront of alternative energy technology. Feature external charge controllers with three-phase AC output, so you can install a long cable run without worrying about DC voltage drop. Includes generator, blades, tail, hub, nose cone and charge controller.

- Rated power: 200W
- Output voltage: 12VDC
- Recommended tower height: 4.5m

MG-4520 *was $499.00*

NOTE: Spare parts available. Different version require different spare parts. Please call to confirm which version you have.

$399.00 SAVE $100

Also available:

12V 300W Wind Turbine MG-4580 was $699.00 now $649.00 save $50.00
24V 300W Wind Turbine MG-4582 was $699.00 now $649.00 save $50.00
24V 500W Wind Turbine MG-4590 was $949.00 now $899.00 save $50.00

Limited stock. Be quick!

Jaycar website NOW mobile friendly!

Order from your phone!

http://m.jaycar.com.au

Underwater Fun!

LED Powered Diving Torch

Encased in a tough, chemical resistant and corrosion proof fluorescent yellow body and will blast out 250 Lumens of white light. Includes a carrying strap and rippled handle for maximum grip and comfort. Requires 2 x C batteries.

- 1 x Luxeon Rebel 100 White LED
- Burn time: 35 hrs (max output)
- Size: 182(L) x 89(W)mm

ST-3459 *was $29.95*

$19.95 SAVE $10

Diving Head Torch

Equip yourself with the right gear when venturing into the depths. This head torch can be used up to 30m underwater and has an adjustable head strap.

- Burn time: 25 hrs (ON), 60hrs (flashing)
- 200 Lumens light output
- Uses 4xAAA batteries included
- Size: 110(L) x 80(W) x 90(D)mm

ST-3458 *was $39.95*

$29.95 SAVE $10

Diving Mask with Digital Camera

Strap on this diving mask with a built-in digital camera and you can take up to 2350 photos or 2 hours of video. Features tempered glass lenses, durable frame and a silicone mask gasket.

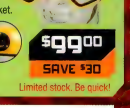

- Rated for 15m depth
- 5MP sensor
- USB 2.0
- 2592 x 1945 resolution
- 3 hour battery life

QC-3186 *was $129.00*

$99.00 SAVE $30

Limited stock. Be quick!

See website for Christmas Trading Hours

YOUR LOCAL JAYCAR STORE – Free Call Orders: 1800 022 888

• AUSTRALIAN CAPITAL TERRITORY

Belconnen	Ph (02) 6253 5700
Fyshwick	Ph (02) 6239 1801

• NEW SOUTH WALES

Albury	Ph (02) 6021 6788
Alexandria	Ph (02) 9699 4699
Bankstown	Ph (02) 9709 2822
Blacktown	Ph (02) 9678 9699
Bondi Junction	Ph (02) 9369 3899
Brookvale	Ph (02) 9905 4130
Campbelltown (Spring Mail Order)	Ph (02) 4620 0084
Castle Hill	Ph (02) 9634 4470
Coffs Harbour	Ph (02) 6651 5238
Croydon	Ph (02) 9799 0402
Erina	Ph (02) 4365 3433
Gore Hill	Ph (02) 9439 4799
Hornsby	Ph (02) 9476 6221
Liverpool	Ph (02) 9821 3100
Maitland	Ph (02) 4934 4911
Newcastle	Ph (02) 4965 3799
Penrith	Ph (02) 4721 8337
Port Macquarie	Ph (02) 6581 4476
Rydalmere	Ph (02) 8832 3120
Sydney City	Ph (02) 9267 1614
Taren Point	Ph (02) 9531 7033
Tuggerah **NEW** (Mail Order Warehouse)	Ph (02) 4353 5016
Tweed Heads (Mail Order Warehouse)	Ph (07) 5524 6566
Wagga Wagga	Ph (02) 6931 9333
Warriers Bay **NEW**	Ph (02) 4954 8100
Wollongong	Ph (02) 4226 7089

• NORTHERN TERRITORY

Darwin	Ph (08) 8948 4043

• QUEENSLAND

Aspley	Ph (07) 3863 0099
Caboolture	Ph (07) 5432 3152
Cairns	Ph (07) 4041 6747
Caloundra **NEW**	Ph (07) 5491 1000
Capalaba	Ph (07) 3245 2014
Ipswich	Ph (07) 3282 5800
Labrador	Ph (07) 5537 4295
Mackay	Ph (07) 4953 0811
Maroochydore	Ph (07) 5479 3511
Mermaid Beach (Mail Order Warehouse)	Ph (07) 5526 6722
Mt Rochampton	Ph (07) 4926 4155
Townsville	Ph (07) 4772 5022
Underwood	Ph (07) 3841 4888
Woolloongabba	Ph (07) 3393 0777

• SOUTH AUSTRALIA

Adelaide	Ph (08) 8231 7355
Cloverly Park	Ph (08) 8276 6991
Elizabeth **NEW**	Ph (08) 8255 6999
Gepps Cross	Ph (08) 8260 3200
Reynella	Ph (08) 8387 3847

• TASMANIA

Hobart	Ph (03) 6272 9955
Launceston	Ph (03) 6334 2777

• VICTORIA

Cheltenham	Ph (03) 9585 5011
Coburg	Ph (03) 9384 1811
Ferntree Gully NEW	Ph (03) 9758 0141
Frankston	Ph (03) 9781 4100
Geelong	Ph (03) 5221 5800
Hallam	Ph (03) 9796 4577
New East	Ph (03) 9859 6188
Melbourne	Ph (03) 9663 2030
Ringwood	Ph (03) 9870 9053
Shepparton	Ph (03) 5822 4037
Springvale	Ph (03) 9547 1022
Sunshine	Ph (03) 9310 8066
Thomastown	Ph (03) 9465 3333
Werribee	Ph (03) 9741 8951

• WESTERN AUSTRALIA

Joondalup	Ph (08) 9301 0916
Maddington	Ph (08) 9493 4300
Mandurah **NEW**	Ph (08) 9586 3927
Midland	Ph (08) 9250 8200
Northbridge	Ph (08) 9328 8252
Rockingham	Ph (08) 9592 8000

Arrival dates of new products in this flyer were confirmed at the time of print but delays sometimes occur. Please ring your local store to check stock details.

Prices valid from 24th November to 24th December 2012.

HEAD OFFICE

320 Victoria Road, Rydalmere NSW 2116
Ph: (02) 8832 3100 Fax: (02) 8832 3169

ONLINE ORDERS

Website: www.jaycar.com.au
Email: techstore@jaycar.com.au

Jaycar electronics
Better. More Technical.

SERVICEMAN'S LOG

My Mini's blinkers went on the blink

The old classic Mini has one big advantage over modern cars – it's dead simple to work on. So when the blinkers and the horn on my Mini went on the blink recently, I thought that the fix would be a doddle. It wasn't.

Items Covered This Month

- Fixing the blinkers and horn on a Mini
- Kenwood DPX-MP2100 car CD player

Dave Thompson, runs PC Anytime in Christchurch, NZ.

ONCE UPON a time, all you needed to fix and maintain your car was a half-decent socket set and a selection of screwdrivers. How times have changed; these days, I barely recognise the lump buried under the plastic mouldings and plumbing as an engine – at least not on modern cars.

Some of my fondest memories involve working on cars with Dad. Just about everything I know about engines and mechanics I learned from him. And due to the sorry state of most of the cars I brought home in my late teens and early twenties, he taught me a lot!

It seemed that no matter what went wrong with my vehicles, Dad would know how to fix it. What's more, he had a well-equipped engineering workshop with a hoist and all the tools necessary to strip a car down and put it back together again – which is what we did on many occasions!

These days, I drive a 33-year-old, Aussie-made classic Mini and love it because when I open the bonnet, there's a simple, normally-aspirated engine with no computers, intercoolers and plumbing going off to God-knows where. When something goes wrong, I break out the socket set and screwdrivers, roll up my sleeves and soon put things right again.

As most readers will know, we've had the odd earthquake here in Christchurch over the last few years. One of the not-so-hidden ramifications of those events has been the transformation of a relatively first-world road system into one more commonly encountered in the Dakar Rally. Car fans may have heard of the famous Belgian Pave section of the Millbrook testing grounds in England, a heavily cobblestoned 1.4km straight where car makers can torture-test the suspension systems (and build quality) of their products.

It's an extremely harsh test but those guys could just as easily follow me around; the Mini and I endure a similar (and longer) course every day on my daily commute to work and back! Where Christchurch was once as flat as a pancake, now every road is a roller-coaster ride of pot-holed, pitted and hastily-repaired tarmac.

Unfortunately, classic Minis are famous for their "chiropractic ride" and tackling the daily commute is taking its toll on both man and machine. I'm not alone with this problem – a mechanic friend tells tales of torn sumps, broken suspension components, shattered shock absorbers and other damage not typically seen on cars here. He

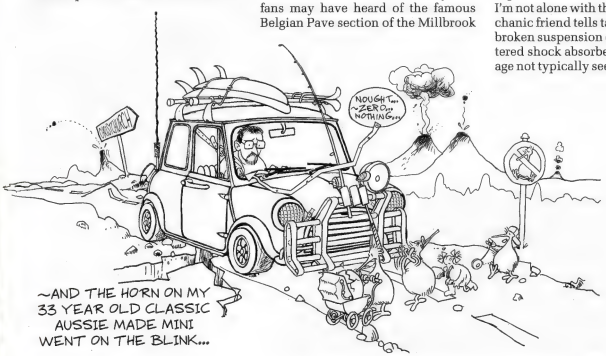

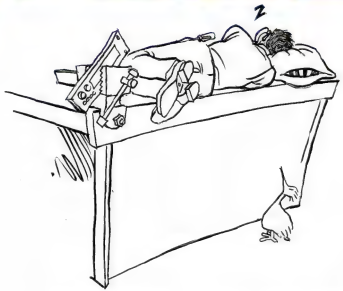

...AFTER REMOVING THE UNIT FROM THE DASH AND RETIRING TO MY WORKBENCH

It all seemed a bit Mickey Mouse but if that's how it's done, who am I to argue?

I snipped the end of the wire to clean it up before stripping away the insulation and then forced the stalk back into the block along with the earth wire, ensuring everything was aligned properly. Once pushed home, I bridged the horn contacts with my screwdriver and was rewarded with a blast from the horn.

All I needed to do now was reassemble everything but before I did, I used a small cable-tie to secure the earth wire to the adjacent cables in the loom. This simple step ensured that the earth wire was no longer taking the strain of the entire loom hanging off it (as was the case before) and should mean that I never have to do this job again.

I then rebuilt the internals of the switchgear onto the backplate, replacing the springs, ball bearings and various contacts and connections in the places I thought/remembered they needed to go. There were no empty spaces remaining (I really had recovered all the necessary bits), so I applied a thin film of grease to the inside face of the top plate and carefully nudged it into position, progressively fastening it down with the five cap screws.

Final problem

As I tightened it all down, the tension in the springs was taken up and I jiggled things around where necessary to ensure the various plastic hinge/pivot/locating pins were seated into the relevant holes in the face plates. Once fully tightened, I then tested the physical operation of the indicators and wipers (which were operated by the lefthand stalk); everything worked very smoothly but when I turned the key on to test the electrical side of things, the lefthand indicator still played up. However, by wiggling wires around, I got them to work so there was obviously something going on with one of the connections.

It wasn't difficult to find which wires fed the lefthand indicator. Unlike modern cars, where the instruments and switches are connected via large, multi-way plugs and everything is mounted on PCBs, each contact, instrument or lamp in the Mini is fed by its own wire from the loom. These wires are connected to brass terminals which are designed to push into the Bakelite and plastic switchgear body.

A spring-loaded tab moulded into each terminal prevents it from being pulled out of the plastic block. However, both the terminals and the block had worn, meaning I could pull many of the terminals out with relatively little effort. A quick tweak with a pair of long-nosed pliers soon had the terminals reset to their original form and they then clipped correctly into the switchgear.

However, I quickly discovered that I could still pull on one wire and stop the indicators from working, which meant that the block itself had worn. Since the terminal would most likely stay in this block for the remaining life of the car, I decided to glue it into place with hot-melt glue. I am loathe to repair anything like this but if I ever need to get the terminal out, I can simply heat it up and pull it out so for now, this simple fix should suffice.

For good measure, I also glued the other terminals in before reassembling the steering column components. I also soldered the bodgie joints I'd found earlier, covering them with heatshrink before closing everything up.

The horn and indicators now work a treat and I'm hoping the constant pounding my poor Mini gets on my daily drive to and from work will cause no more intermittent faults in the modified switchgear.

Kenwood car CD player

This next story comes from D. S. of Maryborough, Qld and concerns a faulty car CD player. Here's how he tells it . . .

A friend turned up recently, complaining of a problem that many of us have faced at one stage or another – the CD player in his car was refusing to eject or play the CD that was trapped inside it.

Sure enough, when I took a look, I discovered that the tuner section worked fine but even though the "ejecting" message appeared on the display, the CD refused to vacate the player. Or to put it more accurately, the player refused to give up the CD.

The unit in question was a Kenwood DPX-MP2100 which is a high-end player. My experience with Kenwood units is that they are generally very reliable and for the most part, easy to disassemble and repair. So I agreed to take a look at it for him.

After removing the unit from the dash and retiring to my workbench, I hooked up the power, accessory and ground connections, along with two small speakers which I keep at the back of my bench. I then removed the top cover which came off easily and I took a look inside the player.

The CD carriage fills the top void inside the unit, so there's not a lot to see at first. All the cables were connected and intact, as were the usual supply rails. Again, nothing I did with

the front panel controls would eject the CD so I disconnected the power, removed the CD carriage assembly and proceeded to spin the motor for the ejection mechanism by hand.

This unit has two other motors, one to spin the CD and the other to control the laser head functions and the sled through some fancy gearing. Neither motor showed any signs of life and when I checked for supply voltages, they were missing in both cases.

Once the CD was out, I reconnected everything and then tried to reset the sled. They can sometimes get out of sync and forcing the controller to run the sled through its various functions will occasionally fix all issues. But not this time.

Next, I checked the limit switches (stuck limit switches are not unknown) and this also proved fruitless until I checked them electrically. This sled has two very small switches which are actuated by the arms which assist the CD being loaded. Because this is an in-car CD player, it doesn't have a disc drawer; instead, it has a front slot into which you push the CD until the sled grabs it and completes the loading procedure.

What normally happens is that as you push the disc into the slot, it pushes both arms apart which in turn trips one limit switch. The other switch is then tripped as the disk slips inside the sled. In this case, however, there was a quiet but persistent buzzing sound when the first, primary loading switch was tripped. At the same time, my bench-top power supply was "screaming" for attention because, while this buzzing noise was present, the player was drawing 2.4A!

This condition lasted about four seconds and then the high-current draw stopped.

So, it looked like we had either a shorted motor drive circuit or a shorted motor. Further checks revealed that both motors worked fine when hooked directly to my benchtop supply, so that eliminated the motors as the possible cause of the fault.

Main circuit board

My next step was to have a closer look at the main CD circuit board. As usual, you cannot easily remove this board as both motors are soldered directly to it, so I de-soldered them, removed the mounting screws and flipped the board over, fully expecting to see burned or severely damaged components or tracks. I found neither, despite carefully going all over the board with a magnifying glass.

Lacking a circuit diagram, I then traced out the motor sections of the board and began testing the various surface-mount components. These all tested OK, so where the heck was the short? Feeling rather puzzled by now, I refitted the board and re-soldered the two motors, then powered up the player and tried the loading motor again. And again it began buzzing and drawing a high current.

I thought about checking the output of the driver chip but as the supply voltage would be pulled low by the short, this would be fruitless. And then it burned me! Oh yes . . . the driver chip was very hot and it burned my skin when I touched it.

Well, the chip would get hot when supplying 2.5A. Clutching at straws, I then decided to cut the tracks between the driver IC's output pins and each motor circuit. After all, these would be easy to repair once I had located the circuit with the short.

The problem was, the short remained, even with all four output tracks cut. OK, so what about the focus coil on the laser head? That was fine too, so no joy there. Further checks also cleared the laser diode itself and the tracking coil circuit.

In the end, the only conclusion I could come to was that the IC itself was faulty. This is a BA5824FP surface-mount chip which controls all the CD sled functions, including the laser head.

Unfortunately, I was unable to locate a supplier here in Australia but I did locate one in the USA. A friend who lives in California purchased two for me and sent them over via airmail. Once received, one IC was promptly fitted and the unit reassembled and tested.

And that was it. Everything now worked fine, with the sled operating crisply and the unit providing excellent audio quality. The owner was thrilled to have his music booming out again, although his neighbours probably weren't quite so happy. SC

Australia's Lowest Priced DSOs

Shop On-Line at emona.com.au

Now you've got no excuse ... update your old analogue scopes!

Whether you're a hobbyist, TAFE/University, workshop or service technician, the Rigol DS-1000E guarantee Australia's best price.

RIGOL DS-1052E 50MHz

- 50MHz Bandwidth, 2 Ch
- 1GS/s Real Time Sampling
- 512k Memory Per Channel
- USB Device & Host Support

ONLY $362 inc GST

RIGOL DS-1102E 100MHz

- 100MHz Bandwidth, 2 Ch
- 1GS/s Real Time Sampling
- 512k Memory Per Channel
- USB Device & Host Support

ONLY $439 inc GST

Sydney Tel 02 9519 3933 Fax 02 9550 1378
Melbourne Tel 03 9889 0427 Fax 03 9889 0715
Brisbane Tel 07 3275 2183 Fax 07 3275 2196
Adelaide Tel 08 8363 5733 Fax 08 8363 5799
Perth Tel 08 9361 4200 Fax 08 9361 4300
email testinst@emona.com.au web www.emona.com.au

EMONA

Building the CLASSiC-D

World's first DIY high-power high-performance Class-D amplifier: 250W into 4Ω; 150W into 8Ω

Following on from last month, we now describe the construction of the CLASSiC-D Amplifier and its accompanying Loudspeaker Protector. We also describe how to test the completed modules and show the connection details for mono, stereo and bridged modes of operation.

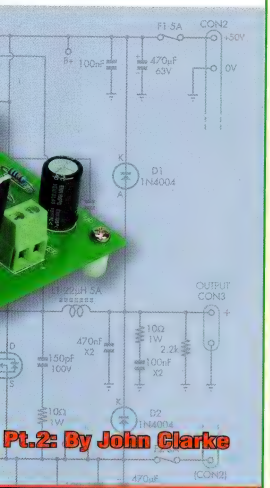

Pt.2: By John Clarke

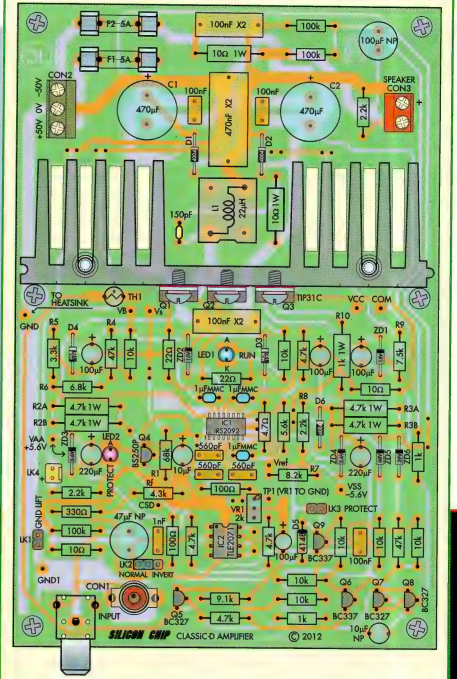

Fig.16: follow this PCB parts layout diagram to build the CLASSiC-D module. The component values shown are for a ±50V supply but note that 12 resistors and two zener diodes (ZD5 & ZD6) must be selected to suit different supply voltages – see Table 1 and Table 2. Take care with component orientation.

THE CLASSiC-D Amplifier module is relatively straightforward to assemble, with all parts mounted on a PCB coded 01108121 and measuring 117 x 167mm. Fig.16 shows the parts layout.

Start by checking the PCB for any defects, such as shorted tracks, undrilled holes and incorrect hole sizes. The PCBs to be supplied by the SILICON CHIP Partshop and kit suppliers will be double-sided, plated through, solder masked and screen printed. These are of high quality and are unlikely to require any repairs but it's always best to check before the parts are soldered in place.

Having checked the PCB, begin the assembly by soldering IC1 in place. This is a 16-pin SOIC package (ie, surface mount) and is easy to solder in place due to its (relatively) wide 0.05-inch pin spacing.

The IC is mounted on the top of the PCB and must be orientated as shown on Fig.16 (ie, pin 1 dot at lower left). It's installed by first carefully aligning it with its pads and soldering pin 1. That done, check that it is correctly aligned. If not, remelt the solder and readjust it so that the pins all sit on their corresponding pads.

The remaining pins can then be soldered, starting with the diagonally opposite pin (pin 9). Don't worry if you get solder bridges between the pins. Once the soldering has been completed, these bridges are easily removed using solder wick.

Once IC1 is in place, the remaining low-profile parts can be installed, ie, the resistors, diodes and zener diodes. Note that the components shown on Fig.16 are for the nominal ±50V supply version. However, as mentioned last month, you can also run the amplifier from lower supply voltages. Table 1 shows the component changes required for the relevant resistors and zener diodes, while Table 2 shows the zener diode type numbers.

Table 1: Component Values vs Supply Voltages			
Supply Voltage	±50V	±35V	±25V
R_F (gain)	4.3kΩ	6.2kΩ	8.2kΩ
R2A, R2B, R3A, R3B	4.7kΩ 1W	3.3kΩ 1W	2.2kΩ 1W
R4	47kΩ	27kΩ	13kΩ
R5	3.3kΩ	2.4kΩ	1.8kΩ
R6	6.8kΩ	7.5kΩ	8.2kΩ
R7	8.2kΩ	8.2kΩ	8.2kΩ
R8	2.2kΩ	1.8kΩ	1.5kΩ
R9	7.5kΩ	4.3kΩ	2.2kΩ
R10	1kΩ 1W	220Ω 1W	100Ω 1W
ZD5	68V 1W	47V 1W	30V 1W
ZD6	39V 1W	30V 1W	20V 1W

This table shows the resistor and zener diode values that must be selected to suit ±50V, ±35VDC and ±25V supply rails. At ±50V, the amplifier will deliver 150W into 8Ω or 250W into 4Ω; at ±35V, it will deliver 60W into 8Ω or 120W into 4Ω; and at ±25V, it will deliver around 25W into 8Ω or 50W into 4Ω.

Table 2: Zener Diode Type Numbers	
Zener Voltage	1W Type Number
5.6V	1N4734
15V	1N4744
20V	1N4747
30V	1N4751
39V	1N4754
47V	1N4756
68V	1N4760

Use this table to select the correct zener diode types for ZD5 and ZD6, to match the required zener voltages.

Table 3 shows the resistor colour codes but you should also use a multimeter to check each one as it is installed, just to make sure (some colours can be difficult to decipher). Note that the diodes and zener diodes must be orientated as shown on the overlay, with the cathode (striped end) of each device facing towards the top edge of the PCB.

IC2 goes in next and can either be mounted in an IC socket or directly soldered to the PCB. Make sure it's orientated correctly, with its notched pin 1 end towards the heatsink.

Follow with the PC stakes and the 2-way and 3-way pin headers. There are 11 PC stakes and these are located at the TP1, GND1, GND, V_{AA}, V_{SS}, CSD, Vref, COM, V_{CC}, Vb and Vs test points. Note that 2-way header LK4 is a polarised type (it connects via a 2-way cable to the Loudspeaker Protector).

The two LEDs, Mosfet Q4 and transistors Q5-Q9 can now go in. Note that LED1 is the blue LED, while LED2 is red. If they come with a clear lens and you don't know which is which, most multimeters have a diode test facility that will drive a LED sufficiently for you to see what colour it is. At least, this should work for the red LED – the blue LED may not light due to its higher forward voltage.

Be sure to install each LED with its anode (the longer lead) towards the heatsink.

Make sure also that you use the correct transistor in each location. Q4 is a BS250P Mosfet, while BC327s and BC337s are used for Q5-Q9. Don't get the BC327s and BC337s mixed up. Leave Q1, Q2 & Q3 (ie, the heatsink transistors) out for the time being.

The capacitors are next on the list. Note that the electrolytic types must be orientated correctly, the exceptions being the 100µF, 47µF and 10µF NP (non-polarised) types which can go in either way around. Be careful not to get an NP electrolytic mixed up with polarised electrolytic of the same value.

Table 3: Resistor Colour Codes

❑	No.	Value	4-Band Code (1%)	5-Band Code (1%)
❑	1	1MΩ	brown black green brown	brown black black yellow brown
❑	2	100kΩ	brown black yellow brown	brown black black orange brown
❑	1	68kΩ	blue grey orange brown	blue grey black red brown
❑	1	47kΩ	yellow violet orange brown	yellow violet black red brown
❑	7	10kΩ	brown black orange brown	brown black black red brown
❑	1	9.1kΩ	white brown red brown	white brown black brown brown
❑	1	8.2kΩ	grey red red brown	grey red black brown brown
❑	1	7.5kΩ	violet green red brown	violet green black brown brown
❑	1	6.8kΩ	blue grey red brown	blue grey black brown brown
❑	1	5.6kΩ	green blue red brown	green blue black brown brown
❑	4	4.7kΩ	yellow violet red brown	yellow violet black brown brown
❑	1	4.3kΩ	yellow orange red brown	yellow orange black brown brown
❑	1	3.3kΩ	orange orange red brown	orange orange black brown brown
❑	3	2.2kΩ	red red red brown	red red black brown brown
❑	2	1kΩ	brown black red brown	brown black black brown brown
❑	1	330Ω	orange orange brown brown	orange orange black black brown
❑	2	100Ω	brown black brown brown	brown black black black brown
❑	2	22Ω	red red black brown	red red black gold brown
❑	4	10Ω	brown black black brown	brown black black gold brown
❑	1	4.7Ω	yellow violet gold brown	yellow violet black silver brown

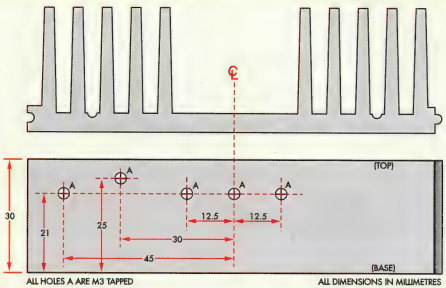

Fig.17: this diagram can be copied and used as a drilling template for the heatsink. You can either drill the holes to 2.5mm and tap them to accept M3 screws or you can drill 3mm holes (see text). Use plenty of light machine oil lubricant when drilling and tapping and clear away the metal swarf on a regular basis. The completed holes must be deburred using an oversize drill.

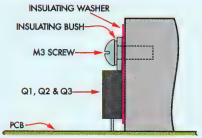

Fig.18: the mounting details for transistors Q1-Q3. They must be isolated from the heatsink using an insulating washer and bush.

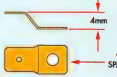

Fig.19: the thermistor clamp is made from a 6.4mm spade lug, bent to give a 4mm step as shown here.

Table 2: Capacitor Codes

Value	µF Value	IEC Code	EIA Code
1µF	1µF	1u0	105
470nF	0.47µF	470n	474
100nF	0.1µF	100n	104
1nF	0.001µF	1n	102
560pF	NA	560p	561
150pF	NA	150p	151

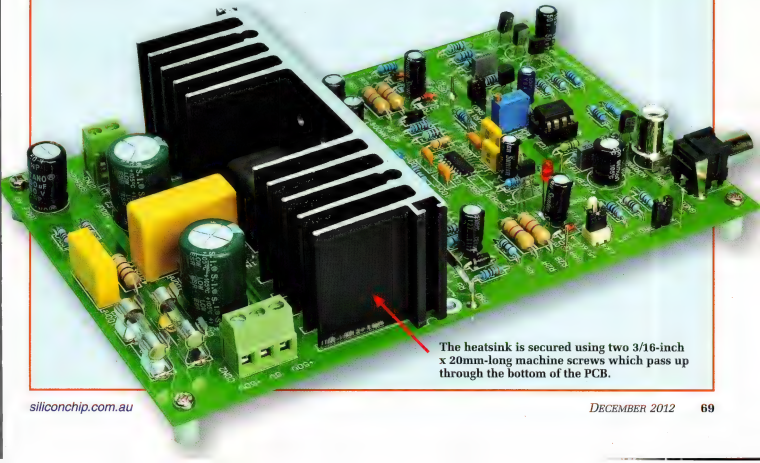

The heatsink is secured using two 3/16-inch x 20mm-long machine screws which pass up through the bottom of the PCB.

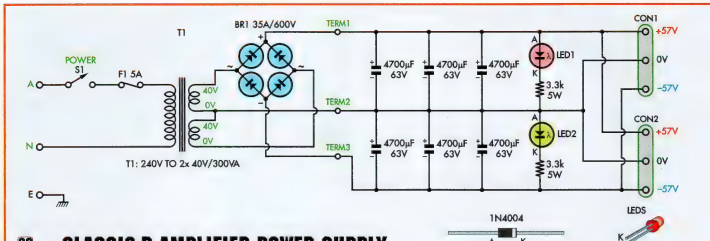

SC 2012

CLASSIC-D AMPLIFIER POWER SUPPLY

Fig.20: the power supply is based on a toroidal transformer (T1) with two 40V windings. These drive bridge rectifier BR1 and six 4700µF filter capacitors to produce the ±57V (nominal) rails.

AS MENTIONED last month, the Ultra-LD Mk.3 Power Supply described in September 2011 can be used to power the CLASSiC-D amplifier. This has a nominal output of ±57V but is still perfectly suitable for use with the CLASSiC-D and will result in slightly higher output power than from a ±50V supply.

Alternatively, you can use the power supply described in September 2008 for the Ultra-LD Mk.2 Amplifier. It's identical to the supply designed for Mk.3 version; only the PCB layouts are different.

Fig.20 shows the circuit details of the power supply. It's based on a toroidal mains transformer (T1) with two 40V windings. These are connected together to give 80VAC centre-tapped and this arrangement drives bridge rectifier BR1. This in turn feeds six 4700µF 63V electrolytic capacitors (ie, 14,100µF on each side) to provide balanced ±57V DC rails to power the amplifier.

Two LEDs are connected in series with 3.3kΩ 5W current-limiting resistors across these ±57V supply rails. These serve two purposes: (1) they provide a handy indication that power is present on the supply rails and (2) they discharge the filter capacitors when the power is switched off (see warning panel).

Note that the specified transformer also has two 15V windings and these were used in the original design to drive a second bridge rectifier and associated filter capacitors. Two 3-terminal regulators were then used to derive regulated ±15V supply rails. These rails are not required for the CLASSiC-D and so these parts have been deleted from the circuit and parts layout diagram (Fig.21).

Power supply assembly

All parts except for the transformer and bridge rectifier are mounted on a PCB coded 01109111. Begin by fitting the two wire links using 0.71mm or 1mm-diameter tinned copper wire, then install the two LEDs. These sit flush against the PCB with the flat side of the lenses orientated as shown on the overlay.

Follow with the two 3.3kΩ 5W resistors. These should be stood off the board by about 2mm, to allow the air to circulate beneath them for cooling (use a cardboard spacer during soldering).

Trimpot VR1 can now installed with its adjusting screw towards the heatsink. Follow this with inductor L1, screw terminal blocks CON2 & CON3, the fuse clips and the vertical and horizontal RCA input sockets (CON1). Note that the screw terminal blocks must be installed with their wire entry openings facing outwards.

Note also that each fuse clip has an end stop, so make sure they go in the right way around otherwise you will not be able to install the fuses later on.

Heatsink mounting

The heatsink is a standard 100 x 33 x 75mm (W x D x H) unit but this must be cut down to 30mm high if the amplifier is to go in a 1U rack case. This can be done using a fine-toothed hacksaw and the job filed to a smooth finish. Alternatively, you can leave the heatsink at its full height if space is not an issue.

Before installing the heatsink, you need to drill and tap five holes to accept M3 screws. Fig.17 shows the drilling details and this should be copied (or downloaded from the SILICON CHIP website), attached to the heatsink and used as a drilling template.

Use a 1mm pilot drill to start the holes, then drill each one to 2.5mm diameter (all the way through) so that it will accept an M3 tap. Take it slowly when drilling these holes and be sure to clear any metal swarf from the drill on a regular basis, to prevent the aluminium from binding to the drill. It's also important to use a lubricant to prevent such problems and aid cutting, eg, light machine oil.

The same goes when tapping the holes. Undo the tap and remove the swarf on a regular basis and use plenty of lubricant.

Alternatively, if you don't want to tap the heatsink, you can simply drill 3mm holes through the heatsink. The various parts are then later secured using M3 x 10mm screws (instead of M3 x 5mm for the tapped version), with nuts fitted inside the heatsink fins.

Carefully deburr each hole using an

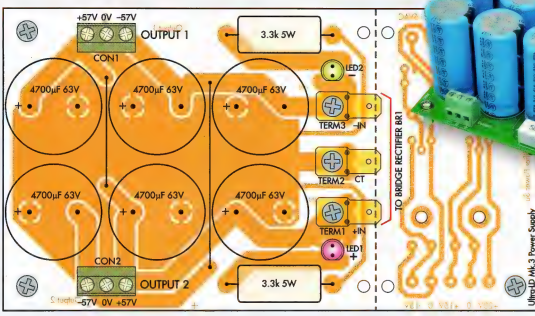

Above: the power supply from the Ultra-LD Mk.3 Amplifier. The parts associated with the 3-terminal regulators on the righthand side of the PCB are not required for the CLASSiC-D.

Fig.21: install the parts on the power supply PCB as shown here. The two LEDs indicate when power is applied and remain lit until the 4700µF capacitors discharge after switch-off.

The two 3-way terminal blocks can then go in with their wire entry sides facing outwards. That done, fit the three Quick-Connect (spade) terminals to the board using M4 machine screws, nuts and washers. If you can't get single-ended chassis lugs, cut one side off double-sided lugs.

Finally, fit the six 4700µF electrolytic capacitors. Be sure to orientate them correctly and make sure that they all sit flush with the PCB.

The completed PCB assembly, along with the transformer and bridge rectifier should be housed in an earthed metal case (this case can also house the amplifier module). The wiring diagram on page 76 of the September 2011 issue (intended for the Ultra-LD Mk.3 amplifier) gives the mains wiring details.

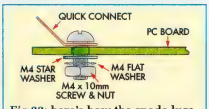

Fig.22: here's how the spade lugs are fastened to the power supply PCB. Alternatively, you can use solder spade lugs – see photo.

WARNING: HIGH VOLTAGE

High DC and high AC voltages are present in this circuit. The power supply uses a total of **80V AC and the amplifier power supply rails are a total of 114V DC**. Do not touch any part of the amplifier circuitry when power is applied otherwise you could get a severe electric shock.

The two LEDs on the power supply board indicate when power is present. If they are alight, the power supply and amplifier boards are potentially dangerous.

oversize drill. In particular, make sure that the mounting area for transistors Q1-Q3 is perfectly smooth and free of metal swarf.

The heatsink can now be fastened to the PCB using two 3/16-inch x 20mm-long machine screws that go in from the underside of the PCB (the screws cut their own threads in the holes). It's simply a matter of positioning the heatsink on the board and installing the screws.

Thermistor TH1 is held against the heatsink using a bracket made from a chassis-mount 45° 6.4mm spade lug. This is bent to shape using pliers as shown in Fig.19. Once it's made, install TH1 on the PCB, leaving its leads

Power Supply Parts List

1 300VA transformer with two 40VAC 300VA windings (or two 35VAC windings)
1 35A 400V chassis-mount bridge rectifier
1 PCB, code 01109111, 141 x 80mm
2 3-way PCB-mount terminal blocks, 5.08mm pitch (Altronics P2035A or equivalent) (CON1-2)
3 chassis-mount male spade connectors
3 M4 x 10mm screws, nuts, flat washers and shakeproof washers
4 M3 x 9mm tapped Nylon spacers
4 M3 x 6mm machine screws
150mm 0.7mm diameter tinned copper wire

Semiconductors
1 5mm red LED (LED1)
1 5mm green LED (LED2)

Capacitors
6 4700µF 63V electrolytic

Resistors
2 3.3kΩ 5W

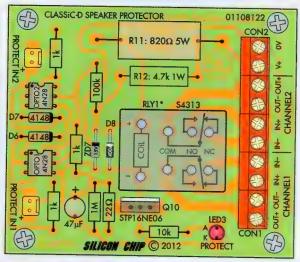

V+	50V	35V	25V
R11	820Ω 5W	330Ω 1W	22Ω 0.5W
R12	4.7k 1W	2.7k 0.5W	1.5k 0.5W

*RLY1 HAS A 24V/650Ω COIL

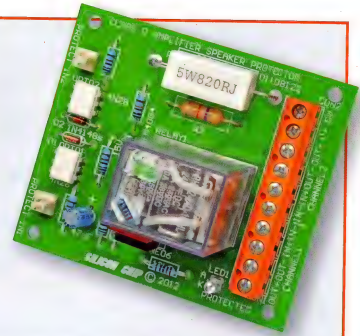

Fig.23: install the parts on the Loudspeaker Protector PCB as shown here. Note that resistors R11 and R12 have to be selected to suit the power supply voltage, as shown in the accompanying table. The 10-way screw terminal block is made by dovetailing five 2-way terminal blocks together before soldering them to the PCB.

about 6mm long, then fit the clamp so that TH1 is held firmly in contact with the heatsink.

Transistors Q1-Q3 can now go in. Fig.18 shows the mounting details. Note that each transistor must be isolated from the heatsink using an insulating bush and silicone washer. Q1 & Q2 are both IRFB5615 Mosfets while Q3 is a TIP31C, so don't get them mixed up.

It's simply a matter of attaching these transistors to the heatsink and tightening their mounting screws, then flipping the board over and soldering the leads. That done, use a multimeter to check that the metal tab of each device is electrically isolated from the heatsink (you should get a high megohm or open-circuit resistance reading). Note that the heatsink is anodised so in order for the multimeter probe to make good contact, it must be touched against a bare metal area. Alternatively, if the mounting holes have been tapped, you can simply test for shorts between the device tabs and the mounting screws.

If the meter does show a short, undo the mounting screw for that device and locate the source of the problem before re-attaching it.

Finally, the heatsink must be connected to the GND PC stake on the PCB. That's done by attaching a solder lug to the heatsink at top left using an M3 x 5mm machine screw, then running a short length of tinned copper wire back to the adjacent GND stake. If the hole isn't tapped, then be sure to scrape away the anodising under the solder lug.

If necessary, this earthing arrangement can later be changed when the amplifier is installed in a metal case. In that case, the heatsink should be earthed to the metal chassis itself.

Testing the amplifier module

With the assembly now completed, it's time to go through the test procedure. Just follow these step-by-step instructions:

STEP 1: install a jumper shunt across the LK3 (Protect) header, just to the right of trimpot VR1. This places the amplifier in the PROTECT mode, so that it will not start up when power is applied.

STEP 2: install a jumper link on LK1, a jumper on LK2 (near the RCA sockets) in the NORMAL position and a jumper on LK4 to allow the PROTECT LED to light.

STEP 3: monitor the resistance between TP1 and GND and adjust VR1 to give a reading of 850Ω. This sets the quiescent operating frequency for the amplifier to about 500kHz.

STEP 4: insert fuses F1 & F2, then connect a power supply to the CLASSiC-D module, making sure the polarity is correct. As mentioned last month, the Ultra-LD Mk.3 Power Supply described in September 2011 can be used. The circuit and the parts layout for this supply are shown in the accompanying panel.

Alternatively, you can use the power supply described in September 2008 for the Ultra-LD Mk.2 Amplifier. It's identical to the Mk.3 supply version; only the PCB layouts are different.

STEP 5: switch on the power supply and check that the protect LED (LED2) lights. **Note that high voltages are present on the power supply and amplifier PCBs during operation. Do not handle or touch the power supply or the amplifier module with power applied, otherwise you could get a severe shock.**

STEP 6: check that the ±50V (or thereabouts) supply rails are correct at CON2 (note: these rails will depend on the power supply used). If these are correct, check that V_{AA} (near ZD3) is at +5.6V (ie, measure between V_{AA} and GND). Similarly, check that both V_{SS} (near ZD4) and CSD are at -5.6V.

STEP 7: check that V_{CC} is around +14-15V (measure between V_{CC} and COM), then check the voltage across the output terminals at CON3 (ie, the speaker terminals). This should be around 1.57V with a 50V supply but will drop to only 6mV or less with an 8Ω or 4Ω load connected.

STEP 8: check the voltage between V_B and Vs. This should be above 9V but will rise to 14V or 15V when the amplifier is actually running (ie, when it is no longer in PROTECT mode).

If any of the voltages in the above steps are incorrect, switch off immediately and check that all parts are correctly placed and orientated. You should also carefully check for shorts between IC1's pins (eg, solder bridges) and for shorts due to solder bridges on the underside of the PCB.

STEP 9: if the voltages are correct, switch off, remove PROTECT jumper LK3 and re-apply power. After a second or two, the PROTECT LED should turn off and the RUN LED (blue) should turn on instead.

STEP 10: if you have a scope or a frequency counter, the quiescent operating frequency can be measured at the Vs test point (near Q1). If you are building a stereo or bridged amplifier, the modules should be set to run at the same frequency under no signal conditions to minimise distortion. This can be adjusted using trimpot VR1.

Speaker protector

The Speaker Protector is built on a PCB coded 01108122 and measuring 76 x 66mm. As usual, check the PCB for any faults (eg, shorted tracks, undrilled holes and incorrect hole sizes) before starting the assembly.

Fig.23 shows the parts layout on the PCB. Start by installing the resistors, diodes and zener diodes. Resistors R11 and R12 have to be chosen to suit the supply voltage – see the table accompanying Fig.23. The resistor values shown on the PCB layout are for a 50V DC supply.

Optocouplers OPTO1 and OPTO2 can now be installed, taking care to orientate them correctly. Follow these with the 47µF capacitor, LED3 and Mosfet Q10. The five 2-way screw terminal blocks can then be dovetailed together (to make a 10-way strip) and soldered in place. Make sure the wire entry side faces outwards and that the blocks all sit flush against the PCB.

Finally, complete the assembly by soldering the polarised 2-way headers and the relay in place.

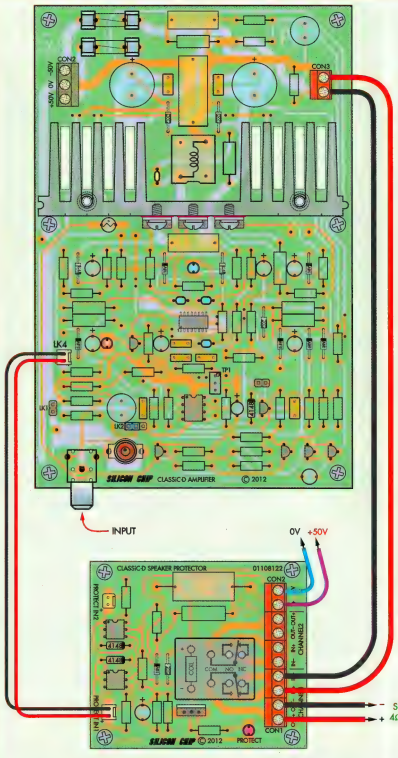

Fig.24: follow this wiring diagram to connect a single CLASSiC-D amplifier module and its accompanying Loudspeaker Protector module for mono operation (power supply connections not shown). The loudspeaker can be either a 4Ω or 8Ω type.

Testing the speaker protector

The Loudspeaker Protector should now be tested, as follows:

STEP 1: connect the supply to CON2 (ie, to V+ and 0V), switch on and check that ZD7 has 15V across it. The relay should switch on, while the PROTECT LED (LED3) should be off.

STEP 2: connect a 9V battery between the two header pins for PROTECT IN1 (at bottom left), with the positive side of the battery going to the "+" input. The relay should immediately switch off and the PROTECT LED should now switch on.

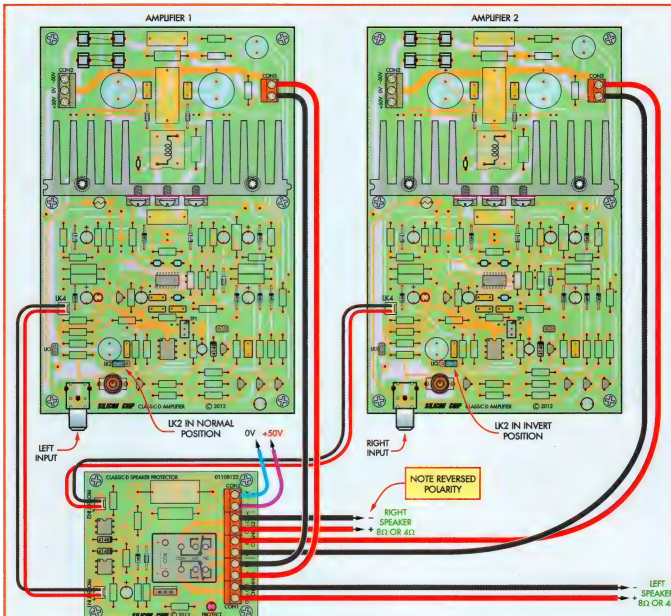

Fig.25: the wiring layout for stereo operation. Use heavy-duty hook-up wire for the amplifier output connections and to the loudspeakers. The wiring from LK4 on each amplifier module and the supply leads to the Loudspeaker Protector can be run using medium-duty cable. Note the swapped speaker polarity for the right channel.

STEP 3: check that the relay also switches off if the 9V battery is connected to the PROTECT IN2 header.

Speaker protector connections

As stated last month, the Loudspeaker Protector can be used with a either a single CLASSiC-D module or with two modules connected in either stereo or bridge mode. Figs.24-26 show the mono, stereo and bridge mode wiring configurations.

The connection from LK4 on each amplifier module is run via a 2-way polarised header lead. This lead is made up using two lengths of medium-duty hook-up wire, terminated at both ends in 2-way header plugs.

It's important to ensure that the loudspeaker connections are correct. In mono and stereo configuration, the positive speaker output from each amplifier module (ie, from CON3) goes to an IN+ input on the Loudspeaker Protector. Similarly, the 0V output must go to the corresponding IN- input.

This is necessary to ensure that the positive side of the loudspeaker is connected to the 0V rail via the NC relay contact when the relay is off. It also ensures that any arcing between the NO contact and the wiper is quenched when the relay turns off. This arcing can be caused by the high voltage DC that's applied to the NO contact if one of the Mosfets in the amplifier fails and shorts the contact to the supply rail.

Note that for a stereo configuration, the second amplifier is set to INVERT mode and the speaker lead polarity is swapped following the Loudspeaker Protector. This is done to avoid supply pumping, as explained last month.

For the bridge mode configuration, the loudspeaker (this must be 8Ω or more) is connected between the positive output of the Amplifier 1 and the OUT+ terminal of one channel on the

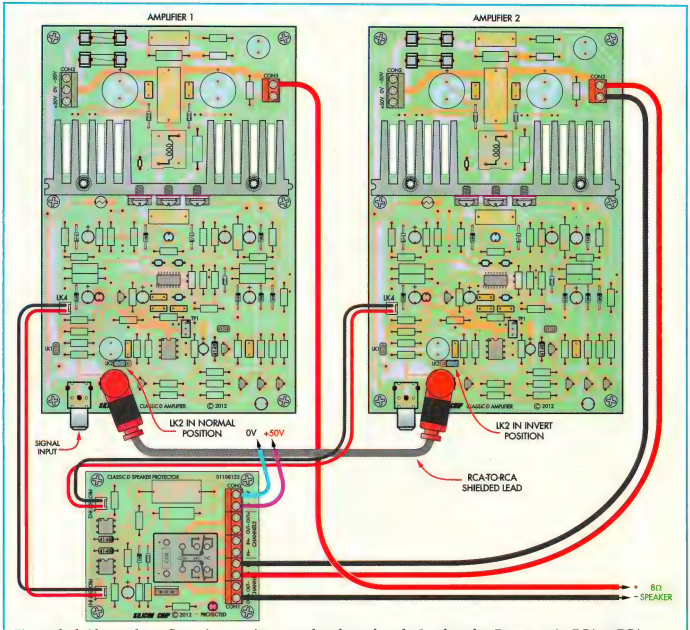

Fig.26: the bridge mode configuration uses just one relay channel on the Loudspeaker Protector. An RCA-to-RCA shielded lead is connected between the signal inputs of the two amplifiers, while LK2 is set to NORMAL on one amplifier and to INVERT on the other. Note that the loudspeaker must be an 8Ω (or higher) type for bridged operation.

Loudspeaker Protector. The 0V output from Amplifier 2 connects to IN- terminal of the Loudspeaker Protector, to break the arc across the relay contacts as before.

In addition, Amplifier 2 must be set to INVERT mode using LK2, while Amplifier 1 operates with LK2 in the NORMAL position.

The completed modules can be mounted in a metal case, along with the power supply. Make sure the case is securely earthed and be sure to use an IEC mains input connector with an integral M205 5A fuse (see page 76 of the September 2011 issue). SC

Where To Buy Kits & Parts

Both Jaycar and Altronics will have full kits available for the CLASSiC-D amplifier module and its Loudspeaker Protector. The details are as follows:

Jaycar:
CLASSiC-D Amplifier Kit (includes pre-mounted SMD IC) – Cat. KC-5514
CLASSiC-D Speaker Protector Kit – Cat. KC-5515
Power Supply Kit (Ultra-LD Mk.2 Supply) – Cat. KC-5471

Altronics:
CLASSiC-D Amplifier Kit – Cat. K 5181
CLASSiC-D Speaker Protector Kit – Cat. K 5182
Power Supply Kit (Ultra-LD Mk.3 Supply) – Cat. K 5168

PCBs: PCBs for the CLASSiC-D Amplifier, Loudspeaker Protector and the Ultra-LD Mk.3 Power Supply can be purchased separately from the SILICON CHIP Partshop.

ALTRONICS
Build It Yourself Electronics Centre

NEW CANNINGTON STORE
Open for business from December 3rd!

Gadget Gift Guide

Get a closer look with a USB microscope camera!
Great for electronic inspection; educational or visual aid (reads fine print with ease!) • 400x zoom • 1.3mp sensor • LED lighting • Still shot function • Focuses down to 5cm!

SAVE $20
$79ea
X 4301 1.3mp 400x
X 4300A 2mp 200x

Also great fun for the kids!

C 9031

SAVE $20
$79

2.4GHz Wireless Headphones With 30m range!
Superb low noise digital transmission - a HUGE improvement in audio quality over traditional analogue RF models. USB dongle can be used with a PC or without a PC - ie: connect directly to an MP3 player. 30m range (line of sight).

Also shoots 5 megapixel stills

S 9446

SAVE $50
$249

Covert Surveillance DVR Camera
Great for monitoring in remote locations. Compact weatherproof unit contains camera, movement detector, DVR with SD card slot and battery pack (requires 8xAA). Monitor screen may be plugged in on-site for quick footage review. Ideal for trail scouting & wildlife/livestock monitoring.

Higher power than some commercial units for an amazing price!

SAVE $40
$149
X 0111

Blast dirt, grease and grime away instantly!
...and no need for harsh solvents. 170 Watts of ultrasonic cleaning power - over twice the power of our X 0109 model. In-built heater helps to lift more dirt than ever before. Great for high use applications - labs, optical outlets, jewellers etc. 2500ml tank. 240V operation.

SAVE 20%
$47.95
X 4003

Latest Model

Monitor your circulation health at home!
Measures systolic, diastolic pressures & heart rate. A simple way to get fast and accurate blood pressure readings. Stores 40 readings for up to 3 people. Includes batteries & case.

Wireless Desktop Weather Monitor
This compact desk unit measures indoor temperature; outdoor temperature and humidity. Great for greenhouses. -40°C to +65°C. Sensor range 100m. Requires 2 x AA & 2 x AAA batteries.

SAVE 20%
$22
X 7020

Records to USB.

$69
SAVE 30%
A 2808

HD Digital Set Top Box For Home or Car, Boat or Caravan!
Operates from 12V DC or plugpack (included). • Keep the family entertained on holiday in the car or caravan • HDMI, component or composite outputs • Top quality NEC chipset for better reception • High definition • Digital & stereo audio • Just 115mm wide.

A 1110

SAVE 15%
$76

Add Wireless Audio Streaming to any Amp!
This non-descript 'little black box' connects directly into your amplifier via stereo RCA sockets and streams audio from Bluetooth devices within 10m range.

X 3054

TOP VALUE!
$34.95

Colour may vary.

Larger M6 model also available

Skytech M5 Mini RC Choppers Are Back!
Just in time for Christmas - great stocking stuffers for the kids -big or small (read DADS!). New improved flying stability from the latest 3 channel controller. Hovers & flies effortlessly around the room. Requires 6 x AA batteries. Limited warranty.

Nifty Tablet Desk Stand
Adjustable, universal aluminium benchtop stand for tablets & e-Readers. A must have for hands free web surfing, reading recipes and watching movies. Non-slip rubber feet. *iPad for illustration purposes.

Similar brand name versions sell for over $70

SAVE 19%
$20
H 8250

SAVE $50
$299
S 9406

Added security for the family!

Colour TFT Video Door Intercom
• A safe & easy way to monitor the front door • Ultra-sharp 7" colour screen • Records photos of visitors when you're not home • USB/SD photo, video & MP3 playback • Includes power supply, hookup cable, base station & camera unit • Remote door latching* • Expandable to 4 base stations (S 9407) & 2 cameras (S 9409). *When used with optional door strike S 5385 $44.95.

$99
SAVE $50
S 8862

9" Widescreen LCD

Digital TV for the Car, Caravan or Boat.
This 9" wide format LCD screen offers excellent clarity. It displays TV stations via an inbuilt DVB-t and analog tuner. Powered by a 10xAA battery box or mains plugpack or car accessory socket.

Key Features
MP3 & video USB/SD playback
Photo slideshows
Digital SD & analog tuner
Full function remote control
Composite AV input
"Video flip" for use with reversing cameras

Phone Order Now On...
1300 797 007
or shop online 24/7 at www.altronics.com.au

Our Build It Yourself Electronics Centres...

» **Balcatta WA:** 7/58 Erindale Rd » **Cannington WA:** 6/1326 Albany Hwy
» **Perth WA:** 174 Roe St » **Auburn NSW:** 15 Short St » **Springvale VIC:** 891 Princes Hwy

The original and the best. Designed and made in the UK.

Q 2100

LOW PRICE!

$99

Test & Identify Parts In Seconds - A Real Time Saver

This compact, easy to use, component analyser is like having a library of electronic info at your fingertips! Saves hours of looking up specs. Great for R&D and engineers. Identifies: • Diodes • Bipolar transistors • MOSFETS • JFETS • SCRs & Triacs • LEDS • Thyristors and more!

S 8745

$189

SAVE $40

With detachable wireless monitor

See Inside Walls, Pipes & Conduits...

...with this handheld inspection camera & detachable wireless LCD monitor. Great for accessing difficult locations such as wall cavities, ceiling spaces, pipework, industrial machinery & engines. Requires 4xAA batteries for camera. Screen fitted with rechargeable battery (charger included).

Get A Better View!

NO MORE EYE STRAIN

Hot deals for the handyman & enthusiast...

Great value!

T 2485

SAVE 23%

$26

Variable Temperature Soldering Iron

This great adjustable soldering iron is easy to use and flexible enough to tackle small or big jobs. Adjustable between 250° and 450°.

Great for servicing & re-work

T 2460

$209

SAVE $40

Micron® 100W Digital Lead Free Soldering Station

Generates high tip temperatures suitable for lead free soldering (200° to 450°C). In-built power saving mode reduces power consumption and dramatically increases tip life. A high quality ceramic element allows rapid tip heat recovery and consistency. Includes 0.5mm tip. Optional SMD tweezer handles T 2461 ($119).

All metal case	2 Year Warranty	Suits lead free soldering

T 2488

SAVE 20%

$15

Mini Keyring Jet Blowtorch

Produces a powerful jet like flame - up to 1300°C! • Great for hobbyists • Adjustable flame • Refillable • One click ignition • Diecast case

Stocking stuffer!

A 0205

SAVE 30%

$10

Handy Laser Pointer

Get your point across! Great for lectures, building sites, guided tours etc. 50m range. Includes batteries.

SAVE $30

$119

S 9423

Install yourself & save!

120° view	2.5" colour screen	Waterproof camera

Colour Reversing Camera & Monitor

A must have for hassle free reversing! The mini screen mounts discretely to your dash, while the camera fits into the number plate recess. Includes a 5m lead. Hooks up to the reversing lights, powering up when required.

T 2599

SAVE $20

$89

Iroda® 100W Handyman Gas Tool

Cordless Go-Anywhere Soldering Iron & Blow Torch. One-click piezo ignition. 2 hours use from a full tank! Kit Includes: • Blow torch tip • Hot knife tip • Hot air tip • Solder • Sponge • Carry case

Great gift idea for the home handyman

T 2596

SAVE 24%

$45

Handyman 70W Gas Soldering Kit

Small, yet powerful cordless soldering iron for quick electronic repairs. 30 min use from a full tank. Kit includes: • Blow torch • Hot air blower • Hot knife • Solder • Sponge • Plastic carry case

SAVE $40

$159

T 2251

Excellent accuracy down to ±3mm

Get an accurate distance measurement in seconds!

This laser tape measure provides an instant 'one touch' measurement - up to 30m. Plus calculation modes such as add, subtract, pythagorean, square & cubic measurements.

Great for the tackletox or glovebox

SAVE 15%

$28

X 0209

Robust Aluminium 1W LED Torch

With adjustable beam! • Virtually indestructible aluminium case • 80 lumens light output • Long life 80,000hr LED • Includes pouch • Requires 3xAAA batteries. • ≈120mm long.

T 2175

SAVE 18%

$45

9pc 1000V Rated Insulated Tool Kit

Great for electricians, technicians or anyone working on mains equipment! Includes cutters, pliers, wire strippers, 5 screwdrivers, 240V test driver and 2 rolls of tape.

Great for the BBQ!

Q 1278

BARGAIN

$19.95

Probe Thermometer

A handy instant read thermometer for kitchen or BBQ use. Plus its great for monitoring liquid temperatures in labs. Stainless 'easy clean' probe. °C or °F, min/max hold, -40°C to +250°C. Includes battery.

SAVE 24%

$49

T 5020A

Tools not included.

Sturdy Aluminium Tool Case

Aluminium panels, reinforced corners & seams for serious protection! Locking latches. 460x325x150 mm.

SAVE 18%

$10

X 0198

Compact 4 LED Headband Torch

• 3 white LED • 1 red LED • 3 modes - white light, red light or flashing red • Requires just one AA battery. • So light, you'll barely know you're wearing it!

Express Order Hotlines:

Phone: 1300 797 007
Fax: 1300 789 777
www.altronics.com.au

ALTRONICS

BUILD IT YOURSELF ELECTRONICS CENTRE

Top Notch Audio Visual Savings

$99 SAVE $40

Works with Xbox & Playstation

Flips Over!
For keyboard & trackpad functions

A 1004

Universal Remote, Keyboard & Mouse All-In-One!
This versatile backlit Sunwave® universal remote features a unique double sided design for use with both HiFi & computer equipment. It's ideal for the new range of smart TV's and media centres on the market. Quick setup to suit your devices via a comprehensive code library and PC software. Includes USB dongle.

2.4GHz wireless	IR Learning	Requires 2xAAA batteries.

SAVE $50
$349
C 5201

RATTLE THE FLOORBOARDS!

Opus One® 180W Subwoofer Sensation!
Add cinema like realism to your home theatre sound system. Massive 180W 10" driver with built in amp. A stunning frequency response of 35Hz-1KHz. Level, phase & crossover control built in.

"Best value subwoofer we've used. Even compared to big brand names costing twice as much" - Ashley, Retail Music Systems

50% OFF

Sunwave® Multimedia PC Remote Control
Combines functions for DVD, TV tuner, web browser, mouse & keyboard. Includes USB infra-red receiver. Great for browsing the web on your TV. Requires 2 x AAA batteries.

D 2401

HALF PRICE!
$24.95

Great for Smart TVs & laptop presentations

C 5283

SAVE $20
$79/pr

Big Sound For Small $$$
These mini cubes produce an amazing sound with a subtle appearance. Swivel mount drivers. Ideal for the kitchen, study or bedroom. 15W 8Ω. 130Hx65Ww75Dmm.

Great for caravans!

L 2026

SAVE 35%
$29

Digital TV Panel Antenna
Provides 25dB gain for clear digital TV & radio reception. Includes power supply & PAL to F lead. Size 190x118mm.

With Infra-Red Learning

A 0977A

SAVE 15%
$24

Jumbo 4 In 1 Remote Control
• Great for the kids! • Each button is about the size of a 20c coin! • Pre-programmed with 1000's of codes, plus IR learning. • Requires 2xAA batteries • Size: 284 x 128mm.

C 0844

SAVE $30
$99/pr

Weatherproof Speakers for the 4WD or Boat!
Maintenance free outdoor sound. These weatherproof 6x9" speakers are designed for long life in marine or tropical areas. Also great for caravans. 30W RMS. 4Ω.

H 8150

SAVE 26%
$29

Picture Hanging TV Bracket
It looks like a bunch of obscure parts, but it it in fact a nifty TV bracket, allowing you to hang your TV up like a picture. Suits 32-55". 50kg max.

SAVE $20
$79
S 9359

5.8GHz Wireless AV Sender
Great for wireless CCTV! • Transmit stereo audio & composite video without cables from room to room • 30m range • IR sender built in • Includes transmitter, receiver & plugpacks.

NEW!
$19.95
X 0600B

Rechargeable design!

(Phone for illustration purposes.)

FM Car Audio Transmitter
Ideal for cars without Bluetooth audio, this FM transmitter sends your tunes to any FM frequency on your car radio. Features hands free muting when the phone rings.

SAVE $20
$49
A 1170

Infra-Red Extender Kit
Great for controlling equipment when its located inside cabinets. Kit includes hub, IR target, four IR emitters & power supply. Foxtel compatible (non IQ only).

Power For The Open Road!

240V Power From Your Drink Holder!
Provides 240V power for charging laptops, small tools, lamps, chargers and more! 150W rated (450W surge). Ideal for camping. Host of protection features. Soft start & high/low voltage shutdown. 12V input. 60mmØ.

Modified sine wave

M 8070

SAVE 25%
$33

SAVE 15%
$15

M 8622

Power up your cup holder
Fitted with dual USB & accessory sockets. 5V 1A USB output.

Buy two for $16

M 8623A

HANDY!
$9.95

Handy Car USB Adaptor
Stay charged up on the road! Max output 2A.

Laptop & USB Car Charger
This compact supply simply plugs into a car accessory socket & provides regulated power to a laptop. Selectable voltages 15, 16, 18, 19, 20, 22 and 24VDC, up to 120W. Supplied with 8 adaptors to suit most laptops.

M 8627A

SAVE 20%
$44

Multivoltage Car Power Supply
Simply plugs into your car accessory socket & keeps your portable devices powered up. Keeps game consoles charged on long road trips! 3-12VDC adjustable, 1.8A max.

M 8620A

With USB

SAVE 24%
$15

NiMH 2 Hour Battery Charger
Use it at home or on the road! Charge 4 x AA or AAA batteries in just 2 hours. LCD readout provides bargraph charge status. Note: Not suitable for use with low-discharge NiMH batteries (S 4704/8).

SAVE 35%
$19

Includes mains plugpack and car power adaptor.

A 0283

SAVE 25%
$22

Keep your car or boat battery in top condition!
This 5W trickle charger helps extend the life of your battery during periods of inactivity. Could save you big $$$ on replacement batteries. ≈100mA charge rate. Connects via car accessory socket or croc clips. Size: 35x13cm.
Not designed to charge dead flat batteries.

N 0700

ALTRONICS
BUILD IT YOURSELF ELECTRONICS CENTRE

Our Build It Yourself Electronics Centres...

» **Balcatta WA:** 7/58 Erindale Rd. » **Cannington WA:** 6/1326 Albany Hwy
» **Perth WA:** 174 Roe St » **Auburn NSW:** 15 Short St » **Springvale VIC:** 891 Princes Hwy

Massive selection of first release kits!

Silicon Chip 2 x 135W Class AB Amplifier

K 5165

Audio enthusiasts rejoice: it's finally here!

(SC Mar-May '12) A stunning low distortion, high power stereo amplifier designed for superb performance in any 2 channel audio system. It delivers 135W RMS per channel into 8 ohms (or 200W RMS into 4 ohms). It utilises two of the K 5154 amplifier module kits, plus power supply board, toroid, speaker protector kit, heatsinks, input and pre-amp boards & a stylish 2RU all metal chassis.

Features: • 135W into 8 Ohm or 200W into 4 Ohm • Distortion levels around 0.008% • Includes all parts, boards, chassis, heatsinks and toroid • A must have for serious audio kit builders! • 10Hz - 20kHz.

Modules also available separately:	
K 5154 135W Amp Module	$85ea
K 5164 Input Module	$35.95
K 5166 Metal Chassis	$235
K 5167 Speaker Protection Module	$24.95
K 5168 Power Supply Module	$32.95
K 5169 Pre-Amplifier Module	$34.95
MC5540 Power Transformer	$99.95

$749 NEW MODEL

All metal case provides a top quality finish to your kit!

NEW KIT! $29.95

K 6047

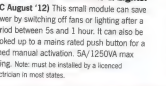

Mains Timer Kit For Fans & Lights.

(SC August '12) This small module can save power by switching off fans or lighting after a period between 5s and 1 hour. It can also be hooked up to a mains rated push button for a timed manual activation. 5A/1250VA max rating. Note: must be installed by a licenced electrician in most states.

NEW KIT! $49.95

K 6043

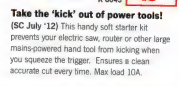

Take the 'kick' out of power tools!

(SC July '12) This handy soft starter kit prevents your electric saw, router or other large mains-powered hand tool from kicking when you squeeze the trigger. Ensures a clean accurate cut every time. Max load 10A.

Also converts to a croaking frog!

NEW KIT! $19.95

K 1109

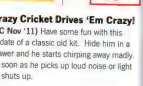

Crazy Cricket Drives 'Em Crazy!

(SC Nov '11) Have some fun with this update of a classic old kit. Hide him in a drawer and he starts chirping away madly. As soon as he picks up loud noise or light he shuts up.

NEW KIT! $54.95

K 4500

Dog Blaster Kit

Keeps your woofer quiet!

(SC August '12) Are barking dogs keeping you up to all hours? The dog blaster hooks up to high power piezo tweeters (not supplied) and outputs an ultra high frequency sound to deter dogs from barking constantly. Note: Please use responsibly. Excessive use may actually make barking worse if the dog gets used to the noise.

K 4030

NEW KIT! $54.95

High Energy Ignition Kit

(SC November '12) Revised design for 2012 - cheaper too! Use it to replace a failed ignition module in an older car or upgrade a mechanical ignition system when restoring a vehicle. It will work with virtually any ignition system that uses a single coil.

K 5804

NEW KIT! $89.95

LED Musicolour Kit

(SC October '12) Updated Musicolour for LED technology! A continuously changing kaleidoscope of colour changing in time to the music. Controls up to 16 strings of LEDs tuned to individual frequency bands. Great for Christmas lighting or DJ's and parties.

NEW KIT! $69.95

K 5181

'Classic-D' Amplifier Module Kit

(SC November '12) A rugged and reliable Class-D audio amplifier producing up to 250W into 4Ω. This high efficiency, high power design is ideal for building into any audio amplifier design. Class-D amps are commonplace amongst consumer equipment. Low distortion <0.01%. Based on the IRS2092 audio amplifier chip.

K 5182 Optional speaker protector	$19.95

K 9555

NEW KIT! $94.95

Colour MaxiMite Kit

(SC September '12) The new colour maxi-mite is here! Upgraded with colour VGA output, stereo audio synthesiser, real-time clock, Arduino compatible connector and 20 more I/O lines. A powerful programmable computer for innumerable logging, monitoring and switching projects. Note: SD card not included.

Original MaxiMites Still Available	
K 9550 Maximite BASIC SD Computer	$89.95
K 9552 Mini Maximite Module	$49.95

K 6029

NEW KIT! $59.95

Get the most from your solar panels with an MPPT charger.

(SC March '12) Delivers optimum charge current to your connected batteries via an in-built 3 stage charging system (bulk, absorption, float). Equalisation feature allows you to ensure all cells in a bank are equally charged. Suitable for charging 12V batteries from nominal 12V panels up to 120W (can be modified to suit 24V systems). Note: this is MKII version of this kit published in March 2012 issue of Silicon Chip.

Sale Ends December 31st 2012

Altronics Phone 1300 797 007 Fax 1300 789 777.
Mail Orders: C/- P.O. Box 8350 Perth Business Centre, W.A. 6849.

© Altronics 2012. E&OE. Prices stated herein are only valid for the current month or until stocks run out. All prices include GST and exclude freight and insurance. See latest catalogue for freight rates. All major credit cards accepted.

Resellers:

WESTERN AUSTRALIA

Bunbury	ML Communications	(08) 9721 9800
Esperance	Esperance Communications	(08) 9071 3344
Geraldton	ML Communications	(08) 9965 7555

VICTORIA

Beaconsfield	Electronic Connections	(03) 9768 9420
Castlemaine	Top End Technology	(03) 5472 1700
Clayton	Rockby Electronics	(03) 9562 8659
Cranbourne	Bourne Electronics	(03) 5996 2755
Croydon	Truscott's Electronic World	(03) 9723 3860
Geelong	Music Workshop	(03) 5221 5844
Healesville	Amazon DVDs Healesville	(03) 5962 2763
Highett	AV2PC	(03) 9555 2545
Leongatha	Gardner Electronics	(03) 5662 3891
Melton	Melton Electronics & Comms.	(03) 9743 1233
Nunawading	Semtronics	(03) 9873 3555
Preston	Preston Electronics	(03) 9484 0191
Sani Remo	Shoreline Electrical Wholesale	(03) 5678 5361
Somerville	AV2PC	(03) 5978 0007
Stawell	David O Jones Mitre 10	(03) 5358 1205
Wodonga	Exact Computers & Home Ent.	(02) 6056 5746

TASMANIA

Hobart	Active Electronics	(03) 6231 0111
Launceston	Active Electronics	(03) 6334 7333

QUEENSLAND

Brisbane South	Delsound	(07) 3397 8155
Brisbane North	Prime Electronics	(07) 3252 7466
Cairns	Pentacom	(07) 4032 1710
Caloundra	IT Shop	(07) 5309 5943
Clancurry	Access Electronics	(07) 4742 2590
Gold Coast	Prime Electronics	(07) 5531 2599
Hervey Bay	Ultra Music	(07) 4128 2037
Innisfail	Leading Edge Electronics	(07) 4061 6214
Longreach	Access Electronics	(07) 4658 0500
Rockhampton	Access Electronics	(07) 4922 1058
Toowoomba	Michael's Electronics	(07) 4632 9990
Townsville	Solex	(07) 4771 4211

NEW SOUTH WALES

Brookvale	Brookvale Electrical Dist.	(02) 9938 4299
Casino/ck	Leading Edge Electronics	(02) 4990 5971
Cobar	Cobar Electronics	(02) 6836 2962
Deniliquin	Wired Entertainment	(03) 5881 3555
Gloucester	Autolec Gloucester	(02) 6558 1600
Grafton	Downes Electronics	(02) 6642 1911
Griffith	Griffith Systems Plus	(02) 6964 5933
Gunnedah	Protronics	(02) 6742 2110
Lithgow	Leading Edge Electronics	(02) 6352 3333
Nth. Richmond	Candle Power Technologies	(02) 4571 4699
Oak Flats	Oak Flats Electronics	(02) 4256 6120
Orange	Fordray Electronics	(02) 6362 9901
Penrith	Penrith Light and Sound	(02) 4733 3333
Port Macquarie	Fettel Communications	(02) 6581 1341
Raymond Terrace	Leading Edge	(02) 4987 4909
Smithfield	Chantronics	(02) 9609 7218
Tamworth	Bourke Street Electronics	(02) 6766 4664
Tenix	Noxledge Systems Pty Ltd	(02) 6551 3622
Wagga Wagga	Wagga Car Radio & Hi-Fi	(02) 6925 6111
Waterloo	Henkes Electrical Supplies	(02) 9319 3133
Wetherill Park	Techtron Electronics	(02) 9604 9710
Windang	Mad Electronics	(02) 4297 7373
Wyong	Coastal Caravan And RV	(02) 4353 1100

SOUTH AUSTRALIA

Adelaide	Astronics	(08) 8212 6212
Brighton	Force Electronics	(08) 8377 0512
Enfield	Astronics	(08) 8349 6340
Findon	Force Electronics	(08) 8347 1188
Kadina	Idyll Hours Hobbies	(08) 8821 2662
Mt Barker	Classic Lights & Electronics	(08) 8391 1133
Milton	Leading Edge Electronics	(08) 8682 4911

NORTHERN TERRITORY

Darwin	Combined Communications	(08) 8942 0644

NEW ZEALAND

Christchurch - Riccarton	Global PC	+64 3 3434475
Christchurch - Shirley	Global PC	+64 3 3543333

Please Note: Resellers have to pay the cost of freight and insurance and therefore the range of stocked products & prices charged by individual resellers may vary from our catalogue.

A cure for a serious fault

By LEO SIMPSON

When readers began assembling kits for our Induction Motor Speed Controller, problems started to arise. Either it would not reliably drive induction motors or it failed – sometimes in spectacular fashion. This caused great consternation in the SILICON CHIP camp until we could finally be sure that we had a successful cure. In brief, the published circuit is fine – but the PCB needs a few mods to cure an interference problem.

It was probably too good to be true. After we published the Induction Motor Speed Controller in the April & May 2012 issues, there was very little feedback from readers and most of that involved queries about when kits would finally be available from Altronics and Jaycar.

Some Controllers were assembled by keen readers who obtained the PCBs and programmed micro from SILICON CHIP but most people wanted a full kit, to avoid the hassles of obtaining all the components separately.

For most readers, that is indeed the best and easiest approach since it is often cheaper, you get all the parts and you know the kitset suppliers will have already built their own prototypes to check that everything is OK.

Once the Motor Speed Controller kits became available, a lot more were built and with so many out "in the wild", eventually problems surfaced. This resulted in us receiving a number of unhappy emails!

Some readers, not to be put off by circuit malfunctions, took matters into their own hands and did some extensive investigations, to see what the problems were.

And in some cases those investigations led to even more spectacular failures and further grief. All of this was most frustrating for us since we had two faultless prototypes.

Eventually, we obtained a defective Controller from Al-

It's been a very popular project but not without a few problems. The mods described here should eliminate those problems, most of which were due to interference.

tronics and indeed, it would not drive a reasonably high power load. The really frustrating part was that it would work if a motor was connected between the terminals labelled W & V on the PCB but not the W & U terminals!

Even more frustrating, when the diagrams on pages 69 & 74 were being prepared, I had nominated terminals W & U as the ones to be used when connecting a single-phase motor.

Paradoxically, if I had nominated the two left-most terminals, W & V, it probably would have taken a few more months before we would have known about the severity of the problem. In fact, many builders would probably have experienced no problems at all.

It also happens that those terminals are wrongly labelled on the wiring diagram but that is something that we would have just put down to a drafting error. That arises because the chip manufacturers, ST Micro, have adopted a very different pin-out numbering convention to the norm.

So what we showed as pin 1 on the PCB overlay diagram (May 2012, page 69) is actually pin 16. And so what we had labelled as output U on CON2 is actually W.

Confused?

Fortunately, none of this actually affects circuit operation.

It seems that no matter how much proof-reading we do on each issue, errors can still be missed.

The only consolation we have is that large commercial electronics manufacturers usually make a series of short production runs to iron out errors in their new designs – and even then, they sometimes have recalls.

Anyway, from the foregoing, it appeared that there was a problem with the W output on the PCB (pin 18 on the IGBT chip). We very carefully checked everything we could on the PCB: voltage checks without a load, waveforms, whatever. Nothing appeared amiss.

At the same time, another reader reported that he found that the supply provided by zener diode ZD1 was too low at around 4V. This would cause faulty operation of the over-voltage comparator (IC2a) and could be fixed by increasing the bias current through ZD1. So maybe we could fix the interference susceptibility of IC2 by generally reducing the circuit impedance around it.

We tried the effect of reducing the bias resistor to the zener diode to 560Ω and reducing the positive feedback resistors at pin 4 of IC2 by a factor of 10. The changes did not work.

OK, so I decided to connect a radiator with several heat settings, across the W & U outputs (as originally labelled), together with a 100W incandescent lamp. The idea was that I could easily see whether the output was being varied while it drove a substantial resistive load. The Controller was set into pump mode.

At the lowest setting, all appeared OK and encouraged, I switched the radiator over to the highest setting which was 1.8kW. This is nominally more than our published power rating of 1.5kW but I figured that it should handle this since

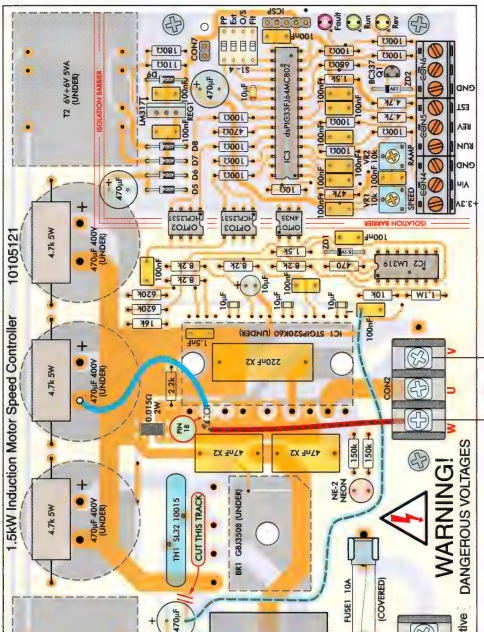

Fig.1: the amended PCB component overlay for the Induction Motor Speed Controller using the original PCB (the circuit remains the same). As well as the mods detailed in this article, it also corrects U/V/W (motor connection) confusion.

the continuous single phase current rating was 8.5A RMS.

And anyway, if it did not like it, the current overload protection would cut in and no damage should be done.

Bang #1

Having turned it on, the output voltage ramped up for a few seconds, whereupon there was a loud bang. Not good!

Upon opening up the case there was the typical burnt component smell and the lid had a burnt patch which just happened to coincide with the position of the 15-milliohm surface-mount current shunt on the PCB.

Umm – where's the current shunt?

It wasn't there – it had been completely vapourised! The

on-board 10A fuse was still intact though. Well, this wasn't supposed to happen. What about all the protection features?

I carefully checked the PCB for any other signs of damage and could find none. I then did as many continuity tests on various components such as the optos, comparator IC, the IGBT bridge etc.

Dumb and dumber!

Then I did something really stupid. I decided to do a live voltage check around the unit. The reasoning was that the main fuse had not blown. This should mean that there was nothing wrong with the power supply itself and all the rest of the circuit should be OK, even without the current shunt because it would not have any load connected.

I duly put the lid on the box (a good idea, as it turned out) and resolved that I would power it up and then take off the lid to check that the neon indicator was on. This would indicate that the high voltage power supply was OK. So that's what I did.

Bang #2...

There was an enormous bang inside the box and all the computers and lights in the office went down as the main circuit breaker tripped.

For a moment, I was too dumbfounded even to swear. But then I let loose: a long stream of invectives about a stupid and incompetent idiot, someone who should not be let within ten metres of mains operated equipment and so on and so forth. As Bugs Bunny was often heard to remark, "What a revoltin' development!"

Once I disassembled the PCB from the heatsink, it turned out that the IGBT bridge had large bits of plastic encapsulation blown off it. You could see the remains of tiny PCBs and surface-mounted components. Of course, this confirms that the IGBT bridge is not a single large monolithic chip but is made up of a number of separate tiny PCBs for logic, boost supplies and the IGBTs themselves. Other components that were likely to have been damaged were the three optocouplers and the comparator IC.

These were all replaced from our component stock, various checks were done and then we powered the unit up with a load. Guess what? It all worked. We could not fault it. Any serviceman doing such a repair would be very happy. It's all fixed. Beauty. Button it and and send it back to the customer.

But we weren't happy; not in the least. We still did not know what the original fault was.

The now-repaired speed controller was returned to Altronics.

What next?

We then had some very useful feedback from reader Geoff Clulow, who had found problems with two units that behaved very similarly to the defective unit that we had destroyed and repaired. After a lot of investigation he determined that there was interference between the U output of the IGBT bridge, IC1, and the adjacent LM319 comparator, IC2. What was happening was the comparator was sending a false error code if a load was connected to the U terminal.

His solution was to cut the track from pin 18 of IC1 to the respective terminal U on the 3-way output terminal block. He then ran a separate wire, well away from the LM319

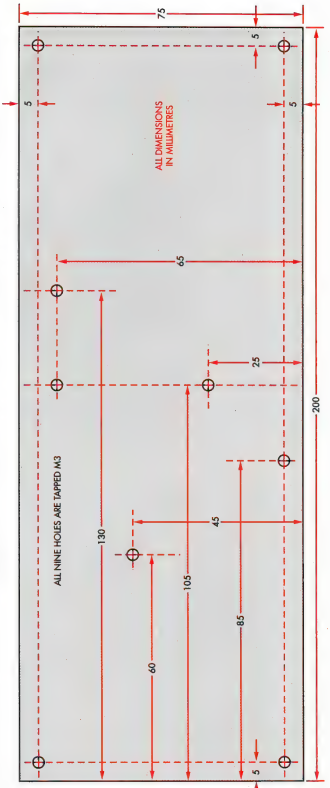

Fig.2: corrected heatsink diagram. The measurements were correct but one hole was out of position.

dual comparator down under the filter block (FLT1) and terminated at the edge of the board.

OK, so this confirmed that the problem involved the pin 18 output from the IGBT bridge and the comparator IC, although we now think that there is also interference coupling into the control circuitry inside IC1 from this track.

This IGBT bridge is actually a "hybrid module" which

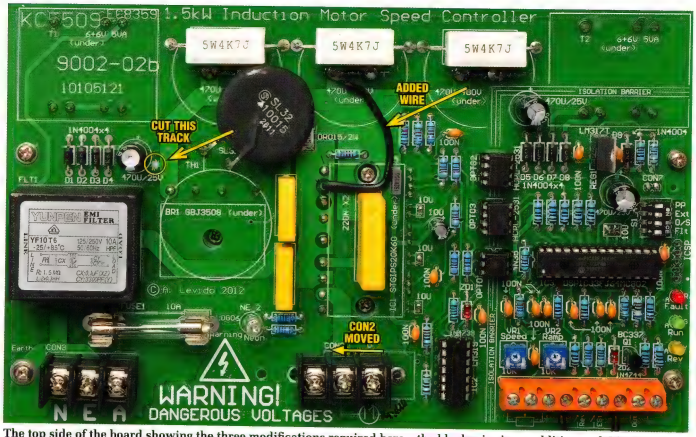

The top side of the board showing the three modifications required here – the black wire is an addition and CON2 is moved over one hole (new hole required). The third mod is the cut PCB track immediately to the right of the 470µF capacitor (top left of board.

We're only showing a section of the underside of the board here for clarity, so you can see exactly where the additional wires go. Note that PIN 18 of the IGBT module is also cut and bent up clear of the PCB.

contains a number of components including the six IGBTs, six normally reverse-biased power diodes and the driving and control circuitry. Tracks on the main PCB running close to this module, carrying high currents with fast voltage ramp times, could possibly interfere with the internal control circuitry. This presumably affects the operation in such a way as to bypass the module's protection features and we think that is why the modules can blow despite having short-circuit and over-temperature protection.

So why didn't we spot this problem during the prototype stage? It appears that most modules work fine with the original design but some small percentage are "fussy" and pick up enough noise so that they do not operate correctly. To put the problem into perspective, we believe that more than 100 motor speed controllers have been built to date but only a handful of constructors have experienced problems.

Regardless, it quickly became obvious that we needed to find a solution. As a result, we have a devised a procedure which incorporates the modifications suggested by Geoff Clulow. In essence, it involves isolating pin 18 of the IGBT bridge and connecting it direct to a pin of 3-way connector CON2 which itself is moved over to the left. At the same time, the now-disconected track from pin 18 is then connected via a wire to the negative terminal of the central 470µF 400V capacitor (shown in blue on top of the PCB). This earths the disconnected track.

Also to correct an error we discovered in the star point earthing on the PCB, we have cut the track to the negative electrode of the 470µF capacitor near D4 and connected it instead to the negative pin of the 100nF capacitor near pin 16 of IC1.

The modifications are shown in the diagram of Fig.1 and this includes the step-by-step instructions. The photos also show the modifications.

IGBT module appearance

While investigating this issue, we also discovered that the STGIPS20K60 module is made in two different factories. These modules differ slightly in appearance – see the photo above. Besides the laser-engraved labels, other differences include the shape of the isolation cut-outs between the pins and the finish of the plastic encapsulation.

Both are genuine ST Micro parts and presumably their internal structure is the same. We believe either type can be subject to the failure mode described here.

OK, let's go through the steps.

First: remove the PCB and heatsink assembly from the case. Detach the PCB from the heatsink. To do this, you need to remove the five screws for the mounting pills, the two screws for the IGBT bridge (IC2) and the one for the bridge rectifier (BR1), which attach these devices to the heatsink. You might also like to disconnect the thermistor (TH1) because too much flexing of its leads will break them.

Second: cut pin 18 of the IGBT module very close to the underside of the PCB and then straighten it so that it projects out horizontally from the chip. Again, not too much flexing or you could break the lead off.

Third: remove the barrier terminal strip CON2 from the PCB and refit it on the PCB on terminal space to the left, as shown in Fig.1. A new 1.2mm hole will need to be drilled in the PCB to accept the left-hand terminal lug. Naturally, that leaves one original hole vacant.

Here's a close-up, not too far off life size, of the underside of both versions of the GIPS20K60 IGBT chips. The top one, with the square notches, is made in ST Micro's Chinese factory as indicated by the "CHN" in the label. The one shown below is made by a subcontractor in Taiwan ("TWN"). With the mods detailed here, both should be quite OK.

Fourth: under the PCB, run a length of mains-insulated wire from the straightened pin 18 on the IGBT bridge to the left-hand terminal lug on CON2. Solder the other terminals of CON2 to their respective (ie new) PCB pads. You could also place a short length of heatshrink tubing over the soldered connection to pin 18.

Fifth: ideally you should also move the adjacent supporting pillar for the PCB so that it is not too close to the relocated terminal W on CON2. This will require another hole in the PCB and a drilled and tapped hole in the heatsink.

Sixth: above the PCB, run a length of mains-insulated wire between the PCB pad originally connected to pin 18 of the IGBT module and the negative terminal of the centre rear 470µF 400V electrolytic capacitor (shown as a blue sleeved wire on Fig.1). This effectively grounds the now unused track and provides some shielding to the LM319 comparator IC.

Seventh: on the top of the PCB, cut the copper track connecting to the negative pin of the 470µF electrolytic capacitor located just to the left of the thermistor (TH1). Then under the PCB, run a length of the wire between the negative pin of the now isolated negative pin of the just-mentioned 470µF capacitor to the earth (upper) pin of the 100nF MKT capacitor located just below the lower right corner of the IGBT bridge (dashed blue line with light blue sleeve shown in Fig.1). This corrects the error in the star-earthing on the PCB, as mentioned previously.

Finally: you need to reattach the PCB to the heatsink and reassemble it into the case. Then run all the checks described in the original article.

If you are assembling a kit with the original PCB (see overleaf), you would obviously not solder pin 18 of the IGBT bridge to the PCB but would bend it out horizontally and solder the red mains-insulated wire from it to the W output terminal on CON2.

3-phase wiring

Finally, a note on the 250VAC-rated cable to be connected to the output connector CON2. Instead of supplying the kit with a surface-mount 3-pin chassis socket, Jaycar supply the kit with a short extension lead which is meant to be cut and stripped to provide an input lead with moulded 3-pin plug and an output lead with moulded in-line 3-pin socket. This is quite a valid approach if you are driving a standard single-phase induction motor.

However, this is not appropriate if you are building the

Controller to power a 3-phase motor. For a start, you cannot use a standard 3-pin mains socket for the job and you cannot use the green/yellow earth wire as one of the phase outputs. The earth wire must never be used as an active conductor, not even for a brief test.

The correct cable is a 440V-rated, 4-wire flex, with 3-phase coloured conductors for the motor terminals and a green/green yellow earth conductor which must be connected to the motor frame (a terminal is usually provided in or adjacent to the motor cable entry box).

This cable is not difficult to obtain from electrical wholesalers and even large hardware stores.

If an electrician does the installation, make sure it is done this way.

Revised PCB pattern

To accommodate the changes in this article without having to add extra wires, etc, we have revised the original PCB pattern and it is reproduced below with component overlay.

To recap, if you build this project with the new PCB shown below, none of the changes we've detailed above will be needed – they're all taken care of in the PCB pattern.

However, there may be many original kits (with the old PCB) in the marketplace and/or in constructor's hands but not yet built.

Obviously, if you have the original board, the modifications will be required. (Alternatively, new PCBs can be obtained from the SILICON CHIP PartsShop – see page 104).

How do you tell which board you have?

The easiest way to ensure you have the new PCB is to look at the number on the silk-screen overlay. New boards will have the number 10105122; original boards will be numbered 10105121.

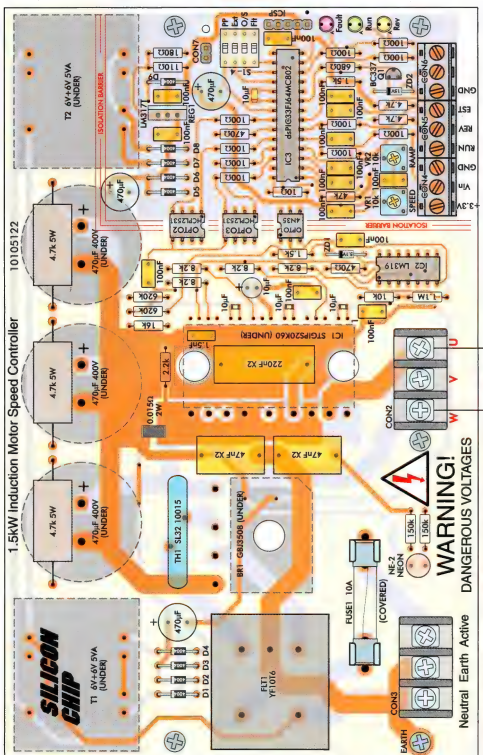

Fig.3: component overlay for the revised PCB which does NOT require the modifications in this article. Simply follow this diagram.
Check to make sure that you have the newer PCB by looking for the new board number (top centre of upper side of board).

Time's Running OUT!

If you want that Gift Subscription to give for Christmas, ACT NOW!!!

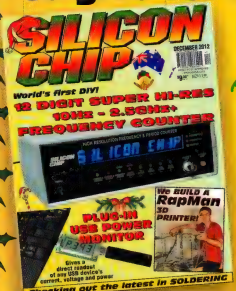

Give the Christmas Gift that KEEPS ON GIVING – month after month after month:

A GIFT SUBSCRIPTION to SILICON CHIP!

For the technical person in your life, from beginner and student through to technician, engineer and even PhD, they will really appreciate getting their own copy of SILICON CHIP every month in the mail.

They're happy because they don't have to queue at the newsagent each month – and you're happy because it actually costs less to subscribe than buying it each month over-the-counter.

- *CHOOSE FROM 6, 12 OR 24 month subscriptions*
- *Start when ever you like (Jan-Dec is very popular!)*
- *Order before December 15 and we'll even send them a card to let them know that you've thought of them!*

There's a handy order form on Page 105 of this issue . . . or call (02) 9939 3295 (9-4, Mon-Fri) to place your order.

And if you're the one who wants a gift subscription for Christmas?

HINT! Leave this page open where someone will spot it!

PIC training course and dev board

Easy-to-follow assembler and C tutorials introduce PIC programming, for baseline and mid-range PICs, through dozens of fully documented hands-on examples.

Ideal for beginners!

Includes:
- Purpose-designed training board
- CD containing all lessons and source code
- five PIC devices
- every component needed to complete each example

Can also be used as a general development board for 6 - 14 pin PICs.

Fully assembled: $89
or in kit form: $69

Christmas Star

Still available!

Cycles through an extensive sequence of pre-programmed effects

See the video on the website...

Full kit: $39

www.gooligum.com.au

NEW!! 4 CHANNEL 433MHz UHF MULTI-FUNCTION Remote Control with Key Fob

The **KSRC4-S-MTL set** is a feature-packed wire-less control system.
Its 4 x 500W output relay operation can be set to 4 x Momentary, 4xToggle (Push On-Push OFF) or 2x2 Latch/Delatch. The unit is mounted in an ABS wall-mounted enclosure.
The sender features a sliding button protector, and is capable of controlling appliances, lighting, scoreboards and models over a distance of 50 metres.

Try it Now!! $34.37 inc. GST Plus $7.50 Pack & Post

Our 5 Kit Bonanza is Back!!

Here's a great Holiday Gift idea that includes a **FK109** 2 LED Flasher, **FK233** EmergencyVehicle Siren with speaker, **FK908** Soil Moisture Indicator, **FK602** 2W Audio Amplifier (Uses the FK233 Siren speaker) and the **FK401** Light-Activated Switch

All 5 kits for $23.43
inc. GST Plus $7.50 Pack & Post
For details and to buy on-line
www.kitstop.com.au
P.O. Box 5422 Clayton Vic.3168
Tel:0432 502 755

KitStop electronics – the fun starts here

WiFiPRODUCTS

Mikrotik's new RB751 is the high powered wireless SOHO Router/Access Point you've been waiting for

Xmas special only $69.95

MikroTik

The RB751 has five Ethernet ports, one USB 2.0 port and a high power 802.11b/g/n wireless AP with antennas built in as well as an external connector. Extremely powerful easy to use Router OS included makes this an amazingly versatile POE router/AP for both commercial and home use.

www.wifiproducts.com.au

1800 546 656 (opt 2)

Mikrotik Routerboards, Internet Load Balancers
Ethernet Extenders, Point to Point Links, RF Cables

BEST OF TEST

1 Time Domain Display
2 Frequency Domain Display

The world's first mixed domain oscilloscope is now even more accessible.

MDO4000 Mixed Domain Oscilloscope

- 4 analog channels
  - 100 MHz to 1GHz bandwidth models
- 16 digital channels
- Parallel & serial bus triggering & analysis
- Built on the MSO4000B mixed signal oscilloscope platform
- 1RF channel
  - 50 kHz - 3 GHz & 50 kHz - 6 GHz frequency range models
  - Ultra-wide capture bandwidth up to 3 GHz
- Unique RF analysis tools: automated markers, spectrogram display, RF vs. time traces, advanced RF triggers

Find the right scope for your project and budget at scoperevolution.com
Or call us now on **1300 811 355** or email **enquiries@tekmarkgroup.com**

TekMark

Tektronix

*NTO Starting Price

2012 Tektronix, Inc. All rights reserved. Tektronix products are covered by U.S. and foreign patents, issued and pending.
TEKTRONIX and the Tektronix logo are registered trademarks of Tektronix.

Finally! It's arrived: A New Controller for the Industrial World that is easy to use

Experience real-time processing powers of PLC and BASIC all in one module. Now you can process complex math, graphic capabilities and communication using BASIC language.

High capacity Programming

The CUBLOC modules have 80~200KB of programming memory... enough for simple to even very complex applications requiring floating point math and MODBUS to interface with other peripherals.

CT-17216 7" VISUAL TOUCH CONTROLLER

320 x 240 Blue Graphic LCD, Internal Touch Panel and Touch Controller 82 I/O ports

INCLUDED:
CT1721C +
RCABLE SET

$399.00 excl GST

CB220 Start Kit

We are offering this Starter's kit for 1st-time users of CUBLOC. This kit includes:

$99.99 excl GST

CUBLOC CORE MODULE CB220
CUBLOC StudyBoard
RS232 Serial Cable
User's Manual

CB210 BASIC with LADDER LOGIC CONTROLLER CUBLOC CORE MODULE

IO port : 20
Flash memory : 80KB
Data memory : 3KB
6 channel 10 bit A/D
3 channel 16 bit PWM
1 channel RS232 communication port

$299.00 excl GST

HUGE RANGE OF CuPANELS AVAILABLE

See our website for more details: there's one to suit your particular application!

www.ozcomfile.com.au **Ph (07)3849 1939**

cleverscope

Mixed Signal Oscilloscope
+ Signal Generator

Check out EEV Blog:
http://www.youtube.com/watch?v=jufVodki4Y8

Mixed signal with protocol decoding

- + 100 MSPS
- + 2 x 14 bit Analog
- + 8 Dig + Ext Trig
- + 8M samples
- + 10 MHz sig gen
- + Stream @ 1.5MSPS
- + Spectrum Display
- + Excel – Matlab live
- + Protocol Decode
- + Drivers for VS
- + USB + Ethernet

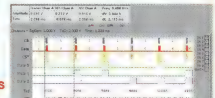

www.cleverscope.com

At Telelink we sell solutions, not problems!

While you're enjoying your Christmas break, TeleLink could be hard at work solving your embedded wireless problems – ready for when you start work again. You probably haven't even thought of the applications or products that wireless can improve!

Introducing the STD-502-R: a 2.4 GHz radio transceiver module for industrial applications

Applications:
Remote control of industrial equipment
Industrial telemetry and monitoring systems

New from Circuit Design, Inc, the leading supplier of low power radio modules, is the STD-502-R, an embedded 2.4GHz radio transceiver module for industrial use.
Technical features:
- Direct sequence spread spectrum (DSSS)
- True diversity receiving
- Low power operation: 10mW 3.3V 68mA
- Communication range 300m (LOS)
- Data rate 9.6 kbps / 19.2 kbps
- Built-in data frame coincidence detection function
- Operating temperature range -20 to +65°C

01010101 **TeleLink** Telelink Communications

www.telelink.com.au

e-mail Jack Chenley and tell him your problems! – jack@telelink.com.au or call (07) 4934 0413 or 0437 335 553

OATLEY ELECTRONICS

sales@oatleyelectronics.com
www.oatleyelectronics.com Phone 02 9586 35 64
PO Box 89 Oatley NSW 2223

MOSFETs...
2SJ328 (P) (TO220) $2.50... **2SJ607** (P) (TO252) $2.50... **2SK3812** (N) (TO252) $2.50... **IRF2804** (N) (TO220) $2.50... **IRF2907** (N) (TO220) $2.50... **IRF820** (N) (TO220) $2.00...

SOLAR...
85W MONO PANEL + A 12/24V 10A Regulator **[85W MONO SOL]** $170.00... **62W** Panel + K009 Regulator kit **[SP62PK1]** $150.00... **40W** MONO SOLAR PANEL + A 12/24V 10A Regulator **[40W Solar]** $90.00...

LEDs and LIGHTING...
3 X 3W LEDs & 3 X DRIVER KITS **[K320P]** $10.00... **K329** 20W FLOODLIGHT **[K329]** $40.00... **LED STRIP**, FLEXIBLE WATER-PROOF (IP65) 12VDC 500mm length **[LS500]** $7.00... **LED STRIP**, FLEXIBLE WATERPROOF (IP65) 12VDC 5m roll **[LS500R]** $50.00... **K293AP** 5 X 12V/4W LED "PURE WHITE" MR16 REPLACEMENT LAMP **[K293AP]** $40.00

TEST EQUIPMENT (USED)
Pulse / Pattern Maker, Agilent 81104A - 80MHz **[81104A]** $POA... IFR 2398 SPECTRUM ANALYZER (USED) **[IFR2398]** $2500

KITS
4CH REMOTE CONTROL Code hopping (virtually pre-built) **[K239]** $30.00... **GARAGE REMOTE CONTROL KIT [K023C]** $46.50

Use the numbers in red to search our web site for more info

Hacking A Mini Wireless Webserver; Pt.2

Interfacing external circuitry and sending emails

By Andrew Snow & Nicholas Vinen

Last month, we explained how to hack the TP-LINK WR703N router into a useful, tiny low-powered web server with built-in WiFi and a USB port. Now we'll show you an easy way to hook up some external components such as sensors and relays via its USB port, without even needing to open it up. We also explain how you can set the router up to automatically send you emails.

IN ORDER TO CONNECT external circuitry to the WR703N, we use a Freetronics LeoStick. This is a small Arduino-compatible module which uses an Atmel ATmega32U4 8-bit microcontroller. It plugs straight into a USB port and provides six analog input pins and 14 digital input/output pins.

We've written some simple software that you can load onto the LeoStick, so that you can then interrogate it and change the output pin states via a USB virtual serial port. It's then quite a simple matter to get the "hacked" WR703N router to send serial commands to the LeoStick in order to interface with the external circuitry. The LeoStick can either be plugged straight into the router's USB host port or it can be connected via a hub and/or extension cable.

The required software is available in a ZIP file which can be downloaded from the SILICON CHIP website. You will also need the Arduino software on your system – it supports Windows, Mac OSX and Linux. We used version 1.0.1. Just follow the steps in the LeoStick getting started guide at: **http://www.freetronics.com/pages/leostick-getting-started-guide**

With that up and running, you can then open the "sketch" we have provided (LeoStick_serial_interface) and upload it to the LeoStick using the **File->Upload** menu option. If you run into trouble, refer to the Freetronics LeoStick website guide.

Once the LeoStick has been programmed, boot up your TP-LINK WR703N and connect to it using SSH (see Pt.1). You should have already installed OpenWRT Linux, as per the previous issue's instructions. Install the driver for the serial mode by first running the **opkg update** command and then **opkg install kmod-usb-acm**. If you get an error, refer to the panel later in the article for help.

Now plug the LeoStick into the WR703N and check that it was recognised by running the following command via SSH: **dmesg | tail -n 5**

It should respond with something like the following:

```
[  72.530000] usbcore: registered new interface driver cdc_acm
[  72.530000] cdc_acm: USB Abstract Control Model driver for
USB modems and ISDN adapters
[ 100.680000] usb 1-1: new full-speed USB device number 2
using ehci-platform
[ 100.840000] cdc_acm 1-1:1.0: This device cannot do calls on
its own. It is not a modem.
[ 100.840000] cdc_acm 1-1:1.0: ttyACM0: USB ACM device
```

Now it's just a matter of programming the router to communicate with the LeoStick.

Temperature sensor

For the purposes of this example, we're going to plug an LM35DZ temperature sensor into the LeoStick and then set up a web page where you can view the current temperature, with it automatically updating every 10 seconds. We soldered the provided header socket strips to the LeoStick, then bent the LM35DZ's pins to fit into the 5V, GND and A0 sockets (without them shorting). If you'd prefer, you can simply solder the device to the pads.

The temperature sensor is just an example; there are a lot of other things you could monitor this way, such as battery voltages, light levels and so on. All you need do is connect a voltage source to one of the LeoStick's pins, using a voltage divider if necessary (ie, if the voltage being sensed can go over 5V).

The LM35DZ's V+ pin goes to the 5V pad on the LeoStick, while the output pin goes to the A0 input pad. The remaining pin is ground, so it is connected to the LeoStick's ground pad – see Fig.1.

Note that with this configuration, the temperature readings may be a touch high since the LeoStick board gets a little warm during operation and this will conduct some heat down the leads and into the LM35DZ. For a more accurate reading, you might want to use a length of 3-core flex (eg, ribbon cable) between the LeoStick and the sensor. That might be more convenient to use anyway.

Lua scripting language

Now we need to read the voltage at the A0 pin of the LeoStick, convert it to a temperature and display it on a web page. We will use the Lua scripting language as this will already be installed on your WR703N – it's used for the web configuration interface ("LuCI"). It's also quite suitable for the task.

To run a Lua script when a website URL is accessed, we create a "CGI" or "Common Gateway Interface" file. This requires us to place the script file, called "temperature", in the **/www/cgi-bin** directory on the WR703N, or a subdirectory of it. The script file contains a number of lines of text, which form the instructions telling the WR703N what to display when that URL is accessed. The script we have used is as follows:

```
#!/usr/bin/lua
print("Content-type: text/html\nRefresh: 10\n")
print("<HTML><HEAD><TITLE>Temperature monitor</TITLE>")
print("</HEAD><BODY>The temperature is: ")
local f = io.open("/dev/ttyACM0", "r+")
f:write("quiet\n")
f:write("A0?\n")
print(f:read("*line")*100 .. "&deg;C.</BODY></HTML>")
f:close()
```

The first line tells the system that this is a Lua script. The second line tells the web browser to process the output as HTML (Hypertext Markup Language) and to re-load the page every 10 seconds, to refresh the reading. The next two lines set the web page title and provides the initial text to display.

We then open the serial port (the **/dev/ttyACM0** file) and set the LeoStick software to "quiet" mode, so it won't send error messages if something goes wrong. That's necessary because for some reason, the WR703N "echoes" the output of the LeoStick back to it and we need it to ignore that extraneous data and respond only to the commands we are sending it.

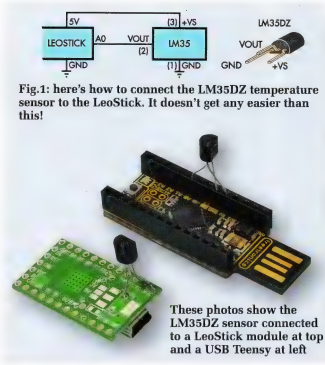

Fig.1: here's how to connect the LM35DZ temperature sensor to the LeoStick. It doesn't get any easier than this!

These photos show the LM35DZ sensor connected to a LeoStick module at top and a USB Teensy at left

We then send it a query to read the value of the A0 analog input pin. We then read the response, which is in volts, and multiply it by 100 to turn it into a temperature in degrees Celsius (the LM35DZ's output is 10mV/°C). The result is output to the web browser, followed by the final text and HTML tags.

As mentioned earlier, these lines go in a file called "temperature" which goes into the **/www/cgi-bin** directory on the WR703N. You can copy it over using OpenSCP, as explained last month. The script is available in a ZIP file in the downloads section of the Silicon Chip website.

Before you can use the script, it must be marked as "executable" or else the browser will refuse to run it. This is done with the following command, via the SSH interface:

```
chmod u+x,g+x,o+x /www/cgi-bin/temperature
```

With the LeoStick plus the LM35DZ plugged into the WR703N's USB port, you should now be able to access **http://192.168.1.123/cgi-bin/temperature** (replacing 192.168.1.123 with the address of your WR703N) and get a temperature readout which automatically updates every 10 seconds.

Higher voltages

We mentioned earlier that you could also monitor a battery voltage in a similar fashion to the output of the temperature sensor. For voltages that will always be below 5V, you can simply connect them to one of the LeoStick's analog input pins, in addition to the required ground connection to the voltage source.

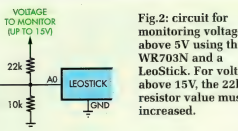

Fig.2: circuit for monitoring voltages above 5V using the WR703N and a LeoStick. For voltages above 15V, the 22kΩ resistor value must be increased.

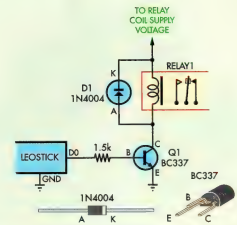

Fig.3: this simple circuit shows how a relay or relays can be connected to the WR703N via a LeoStick, so that you can remotely turn those relays on or off.

But say you want to monitor something that could go over 5V, such as a 12V lead-acid battery. In that case you will need the circuit shown in Fig.2. You will then need to scale the reading from the LeoStick by a factor of (22kΩ + 10kΩ) ÷ 10kΩ = 3.2 to get your voltage reading.

This can easily be done in the script by simply changing the "*100" scale factor used for the temperature sensor, to "*3.2".

For even higher voltages you will need to increase the value of the 22kΩ resistor and adjust the software voltage scale factor to suit.

Controlling relays

It could also be useful to have the WR703N control some relays or other external equipment. These relays could be turned on and off remotely, via a web page. Another possibility is to program the router to automatically switch relays based on a voltage level or other input but we won't go into that here, at least not yet; we'll leave it as an exercise for you, the reader.

The LeoStick can in theory drive small 5V relays directly as each pin can source or sink at least 20mA and in practice, a little more than that. But for most applications it is better to use a small external transistor to switch the relay coil. This way you can also use higher voltage relays (eg, 12V), assuming you have a an appropriate voltage source to drive the relay coils, such as a DC plugpack.

Fig.3 shows the basic configuration. The output pin drives a BC337 NPN transistor via a current-limiting resistor. When that output is high, the transistor's base-emitter junction is forward biased and the transistor turns on, sinking current through Q1's collector-emitter junction and closing the relay's NO contacts.

When the output goes low, Q1 switches off and the current through the coil is interrupted, switching the relay off. The coil generates a back-EMF spike which is absorbed by diode D1. By the way, if you don't want to build the relay drive circuitry yourself, you can get a 4-channel relay driver module designed to interface with Arduino systems (Jaycar Cat. XC4278).

Then we need to write a script which can tell the LeoStick to change the state of one of its output pins; the one for the relay control circuitry. Luckily, the software we have already loaded on the LeoStick can do this job too, so our script, called **relay**, looks like this:

```
#!/usr/bin/lua
print("Content-type: text/html\n")
print("<HTML><HEAD><TITLE>Relay control</TITLE>")
print("</HEAD><BODY>")
local f = io.open("/dev/ttyACM0", "r+")
f:write("quiet\n")
if os.getenv("QUERY_STRING"):upper() == "ON" then
 f:write("D0=1\n")
 print("Relay is now on.")
elseif os.getenv("QUERY_STRING"):upper() == "OFF" then
 f:write("D0=0\n")
 print("Relay is now off.")
else
 print("Error.")
end
f:close()
print("</BODY></HTML>\n")
```

Again, this file should go in **/www/cgi-bin** and the chmod command must be used to make it executable (see earlier example). This script is also available for download from the SILICON CHIP website.

With that file in place, you can go to the following URL to turn the relay on: **http://192.168.1.123/cgi-bin/relay?on** (again, change the address to match yours) and to turn it off, visit: **http://192.168.1.123/cgi-bin/relay?off**

The text after the ? on the address bar is called the query string and this is accessed in the CGI script via the **os.getenv("QUERY_STRING")** call. We then convert it to upper case and check if it is "ON" or "OFF". If it matches either, we send an appropriate command to the LeoStick to change its output pin state.

Rather than having to remember these URLs, you can place them as links in a separate HTML file on the WR703N and then you just need to click the link to turn the relay on or off. To control multiple relays, you could create more than one script file with different names, to suit what the relay controls, and change the two instances of "D0" to refer to a different output pin.

Control interface

If you don't want to fiddle with writing scripts, you can use the control interface script that we have devised, named **control**. This can be placed in the **cgi-bin** directory and when you access it, it displays the voltage at all the analog pins and the state of all the digital pins (see Fig.4).

You can also force the digital pins high or low, or set them back to high-impedance to allow them to operate as inputs. You can also turn the micro's internal pull-up

Using A Teensy Instead Of The LeoStick

The USB Teensy is a USB-based development board for Atmel microcontrollers. It pre-dates the LeoStick and is what we were using when we first started writing this series of articles. As well as being smaller than the LeoStick, it's also cheaper but to get it at the lower price, you need to order it from overseas (it's still cheaper even when you take the postage into account).

The Teensy also has more input and output pins than the LeoStick; there are 25 in total, including 12 analog inputs and seven PWM-capable outputs. It draws just 5mA (ie, about 25mW at 5V). It's available from the USA for about $23 delivered, from the maker's own web site: **http://pjrc.com**

The Teensy comes supplied already flashed with its the "HalfKay" boot loader software, which makes it simple to reprogram it via USB from any PC (Mac, Windows, and Linux supported). As well as its function as a microcontroller development board, the Teensy v2 is also (mostly) Arduino-compatible.

We were able to make the serial interface code work on both the LeoStick and the Teensy 2 with just a minor change.

If you want to use the Teensy, follow the instructions as for the LeoStick but then after installing the Arduino software, you will also need to put the "Teensyduino" software on your system. You can get it here: **http://www.pjrc.com/teensy/teensyduino.html**

It will also install a serial port driver for the Teensy, which is different to the one used for the LeoStick.

Once that's all done, load up the provided sketch in the Arduino software and then go to the "Tools" menu and under the "Board" item, select "Teensy 2.0". Then, verify the sketch using the tick icon in the upper-left corner of the window. Once you've done that, a small separate window should appear, asking you to press the button on the Teensy to activate it.

Plug in the Teensy, wait a few seconds, then press the button. It should say "Programming . . ." and then "Reboot OK". You can then unplug the Teensy from your computer and it is ready to use with the WR703N.

resistors on each input pin either on or off.

Note that this control script gives you access to the full set of available analog and digital pins, not all of which are broken out to pads on the LeoStick (see Fig.4). A larger set of these pins are available on the Teensy module (see panel). Just ignore those which your unit lacks, or else you can modify the script so it doesn't display them if you prefer.

With this control script, you can experiment with the WR703N/LeoStick combination and check that everything works OK. You can customise the script to suit your purposes later, if you want to.

Password protection

Now you probably don't want to give just anyone with internet access the ability to control your relays (or whatever)! So it will be a good idea to add password protection to your site for this kind of task. Luckily this is pretty easy to set up. Using the SSH command shell to the router, enter the following commands:

```
uci set uhttpd.main.config=/etc/httpd.conf
uci commit uhttpd
echo '/:username:password' >> /etc/httpd.conf
/etc/init.d/uhttpd reload
```

Replace "username" and "password" with the name and password that you want to use to access the site. Note that this will password-protect the entire OpenWRT website, including the web configuration interface. Not only will you need to provide this username/password combination to access the web interface but you will also have to log in as root in the usual manner after that.

If you want to protect just a subset of the files with a particular password, you can do that too. Say you have files in **/www/myfiles** and you access them via the URL **http://192.168.1.123/myfiles/** You can change the password setting command to this:

```
echo '/myfiles:username:password' >> /etc/httpd.conf
```

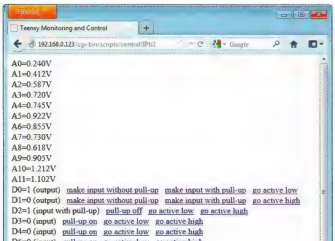

Fig.4: our sample control interface which shows the voltage on each of the analog input pins of the LeoStick or Teensy (A0-A11) and the state of the digital pins (D0-D13). You can also change the direction and level of the digital pins by clicking the links. Note that A0 has an LM35DZ temperature sensor connected, reading 24°C (240mV).

In this manner, you can protect multiple different directories of files using different passwords.

Sending emails

You might want to have the WR703N email you on certain events, eg, excessive temperature or low battery voltage. As an example, let's set it up to send an email if the temperature exceeds 40°C.

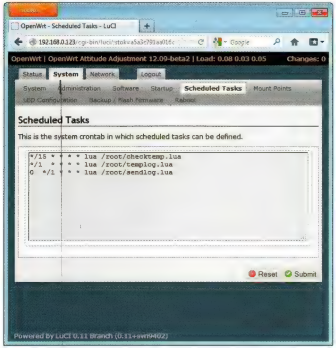

Fig.5: the WR703N's LuCI Scheduled Tasks page which lets you set up scripts to run periodically. These scripts can then send emails depending on the state of the inputs.

Sending email from OpenWRT is easy as long as you know your email server's IP address. First, run the command **opkg install mini-sendmail** via SSH to get the mail-sending software. Next, you need a script to check the temperature and send an email. Call it **checktemp.lua** and place it in the **/root** directory. The contents look like this:

```
local f = io.open("/dev/ttyACM0", "r+")
f:write("quiet\n")
f:write("A0?\n")
local temp = f:read("*line")*100
f:close()
if( temp > 40 ) then
 local email = "example@gmail.com"
 local server = "gmail-smtp-in.l.google.com"
 local mail = assert(io.popen("/usr/sbin/sendmail -s"..server..
" "..email, "w"))
 mail:write("Subject: Temperature too high!\n")
 mail:write("To: "..email.."\n")
 mail:write("\n")
 mail:write("The temperature reading is currently "..temp..".\n")
 mail:close()
end
```

The first few lines read the temperature from the Leo-Stick. Then if the temperature is too high, we open the Sendmail software and write the contents of an email into its input. You should change the email address and email server settings to suit your own mail service.

If you're using Google gmail, then you can leave the server setting as it is. If you don't know the (SMTP) mail server address, you can usually look it up by asking your ISP or Googling it.

You'll want to run this command periodically, to check the temperature say every 15 minutes. To do this, we use the Scheduled Tasks feature of OpenWRT, available under the System section of the web interface (see Fig.5). This lets you edit the "crontab" Linux system file, which tells it what commands to run at what times.

For this to work, you must ensure that the "cron" service is Started and Enabled under the Startup section (also in the web interface), and you must also click the Restart button to reboot the router whenever you make any changes to the Scheduled Tasks.

The format of the Scheduled Tasks section is one line per command, with five numbers at the front to specify when to run the command. These represent Minutes, Hours, Day of month (1-31), Month (1-12), Day of week (0-6). An asterisk (*) can be used to indicate that you don't care about that particular field. To run the command above every 15 minutes, you would add this line:

```
*/15 * * * * lua /root/checktemp.lua
```

If you want to check that it's working you can simply edit the Lua script to lower the temperature threshold below the normal temperature. Once you have verified that you are receiving emails, change it back to the actual threshold you want to use.

Short-term logging

Now let's say you want to be able to see what the temperature was every minute of the day but you don't want to be innundated with emails. What you need to do in this case is log the temperature readings to a file in memory, along with the date and time. We then periodically send the contents of that file via email.

Let's look at how to do that. First, the logging script, located in **/root**, is called **templog.lua** and looks like this:

```
local f = io.open("/dev/ttyACM0", "r+")
f:write("quiet\n")
f:write("A0?\n")
local temp = f:read("*line")*100
f:close()
f = io.open("/tmp/temperature.log", "a+")
f:write("[".os.date("%d/%m/%Y %X")..""] Temperature is "
..temp.."C\n")
f:close()
```

The first part of the script should look familiar. The second part opens the log file in append mode (ie, to add lines to the end of the file) and then writes the date, time and temperature to it. We're putting the log file in the **/tmp** directory since this is stored in RAM rather than flash memory and so it won't wear out the flash if we are constantly writing to a file at this location. The cron entry under Scheduled Tasks then looks like this:

```
*/1 * * * * lua /root/templog.lua
```

Next, we create a script which will periodically email that log file to our address. Let's call it sendlog.lua, again located in the /root directory:

```
local email = "example@gmail.com"
local server = "gmail-smtp-in.l.google.com"
```

The LeoStick with its temperature sensor plugs into the WR703N's USB port. The WR703N can be set up to send an email if the temperature (or some other logged event) exceeds or drops below a set value, or it can email at log a set intervals – see text.

```
local logfile = "/tmp/temperature.log"
local f = io.open(logfile, "r")
local mail = assert(io.popen("/usr/sbin/sendmail -s"..server..
" "..email, "w"))
mail:write("Subject: Temperature log\n")
mail:write("To: "..email.."\n")
mail:write("\n")
while true do
 local line = f:read()
 if line == nil then break end
 mail:write(line.."\n")
end
mail:close()
f:close()
os.remove(logfile)
```

As before, change the email address and possibly the server name to match your mail service. Then we just need to set this up to run every hour, on the hour, in the Scheduled Tasks list with an entry like this:

```
0 */1 * * * lua /root/sendlog.lua
```

Remember to reboot the WR703N after making these changes and voila, you will get an hourly temperature log with one entry per minute.

More possibilities

We've covered quite a bit in this article but there are still lots of things that the WR703N can do that we haven't really explained. That includes playing and recording audio, 3G wireless communications and a whole host of other tasks that can be performed with the appropriate USB peripherals attached.

If there's sufficient interest from readers, we'll cover some of these possibilities further down the track. SC

OpenWRT Beta Issues

The version of OpenWRT which runs on the TP-Link WR703N, "Attitude Adjustment", is still in beta status. That means that it may still contain bugs. It also means that it's constantly changing.

If you install the OpenWRT snapshot onto a WR703N device and the authors make significant changes to Attitude Adjustment, you may find that you can no longer install certain packages. That's because the packages on their website will no longer be compatible with the kernel installed on your router (the kernel is the part of the operating system that is constantly running).

So until it's no longer in "beta", it's better if you install the system and all the packages you need at once, to avoid this problem. If you do run into kernel compatibility problems, you will get a message like this when trying to install a new package:

```
root@OpenWrt:~# opkg install kmod-usb-acm
Installing kmod-usb-acm (3.3.8-1) to root...
Downloading http://downloads.openwrt.org/snapshots/trunk/
ar71xx/packages/kmod-usb-acm_3.3.8-1_ar71xx.ipk.
Collected errors:
* satisfy_dependencies_for: Cannot satisfy the following
dependencies for kmod-usb-acm:
* kernel (= 3.3.8-1-2f68a23229e31667f00b2a0a65027c00) *
* opkg_install_cmd: Cannot install package kmod-usb-acm.
```

The easiest way to solve this problem is to do a "Sysupgrade". To do this, you download the upgrade version of the Attitude Adjustment snapshot (from the same location as explained in the previous article). Then go to the web interface of the WR703N and under the System tab, go to the "Backup / Flash firmware" sub-tab.

Before you do the upgrade, though, be sure to back up all the files you have put on the device (eg, in **/var/www**) using OpenSCP. They will be wiped by the upgrade. For details on setting up and using OpenSCP, refer to last month's article.

Use the "Browse" button in the "Flash new firmware image" section of the web interface to select the snapshot you downloaded earlier and click the "Flash image" button. You will be asked if you want to back up the system settings; you should do so. The process takes only a couple of minutes.

Once the latest version of the software is up and running, you can copy your files back onto the router and re-install any software packages you had installed previously (they are also wiped by the upgrade). You should then be able to successfully install the package(s) that were previously giving you errors.

Where To Get A LeoStick

The Freetronics LeoStick is available from Jaycar for $29.95 (Cat. XC4266) and includes the two low-profile female pin headers shown in the photos. You can also get the LeoStick Prototyping Shield pack for $7.95 (Cat XC4268). This includes the matching male pin headers plus a small "protoboard" that can be plugged into the LeoStick to carry the voltage dividers or relay drivers shown earlier in this article, if required. For more information, see **www.freetronics.com**

Vintage Radio

By Rodney Champness, VK3UG

The Philips Twins – the Australian Model 138 & the Dutch BX221-U

Not quite Philips twins: the Australian model 138 (left) and the Dutch BX221-U (right) look almost the same from the outside (apart from their dial scales) but are very different on the inside.

Back in October, we took a look at the Dutch BX462A and the Australian model 115 receivers, two sets that look the same on the outside but are very different on the inside. This month, we look at another pair of Philips "twins", the Dutch BX221-U and the Australian model 138.

AS BEFORE, THESE new Philips twins are very different on the inside, despite being housed in identical Bakeliute cabinets. And once again, the Dutch set is a triple-band receiver, whereas the Australian 138 is a broadcast-band only set.

The Dutch set also has five valves versus four for the Australian set, and it can cater for mains voltages from 110-220V whereas the model 138 is limited to 200-260V. But perhaps the most important difference is that, unlike the Australian set, the BX221-U doesn't use a mains transformer. In fact, one side of the mains is directly connected to chassis, so this "hot-chassis" set can be dangerous to work on if you don't know what you are doing.

The Dutch BX221-U and the Australian 138 models are smaller than the sets described in October. However, the reason for their identical appearance is the same. The parent company in Holland developed moulds for Bakelite cabinets for various receivers after World War II and several of these cabinets were also used for sets built by Philips in Australia.

Usually, the Australian lookalike didn't appear until 1-2 years after the European set. However, the BX221-U and 138 models featured here both appeared around the same time, in 1953.

The 138 circuit

Take a look now at Fig.1 for the circuit details of the Australian model 138. It's a typical 4-valve superhet mantel receiver intended for suburban use. The valve line-up is 6AN7 (converter), 6N8 (IF amplifier/detector/AGC), 6M5 (audio output) and an EZ82 rectifier, the latter similar to a 6V4.

As shown on Fig.1, an external antenna is connected to the junction of L1 and C1, an input tuned circuit that's resonant just below the broadcast

PRODUCT SHOWCASE

Altronics opens south of the river . . .

Altronics are opening their 5th 'One Stop Electronics Shop' this month. This new store will be Altronics third store in WA, expanding their retail and trade presence in the west. The new store located at 1326 Albany Highway, Cannington (next door to Dick Smith) will provide customers south of the river with a convenient location to shop for parts for their latest project.

Since opening a second WA store in 2011 at Balcatta, Altronics have been searching for a location south of the river to expand into, says Altronics General Manager Brian Sorensen. "The response to Balcatta from customers was just fantastic, we immediately saw the potential for a location in the south."

Contact:
Altronics Cannington
1326 Albany Hwy, Cannington, WA 6107
Tel: 1300 797 007
Website: **www.altronics.com.au**

Windows 8 QuickSteps

Now that Windows 8 is well and truly here, you need to get up and running with it right away.

Marty Matthews' "The QuickSteps Guide", from McGraw Hill has full colour screenshots on every page to make it easy to understand, It includes shortcuts for accomplishing common tasks, need-to-know facts in concise narrative, helpful reminders along with the errors and pitfalls you need to avoid.

The unique landscape layout mimics your computer screen but also lays flat so you can easily refer to the guide while working on your computer.

It's available this month from better bookstores – RRP is AU$23.95 or NZ$33.00

Digital Map Measure with LED light

Working out the distance between two points on a map or chart is easy with this navigation tool. The scale can be adjusted for any map. The LCD screen has a backlight for night use and an LED flash light.

At $9.95, it's a must-have gadget when out on the road, on the water, or in the bush.

Contact:
Jaycar Electronics (all stores)
PO Box 107, Rydalmere NSW 2116
Order Tel: 1800 022 888 **Fax:** (02) 8832 3188
Website: www.jaycar.com.au

Tenrod's LED downlight replacements – they look great and will save $$$!

If you're planning to install new downlights or want to replace existing ones, take a second look at these beauties from Tenrod. They're LED-based and are available in 13W (6-inch) and 10W (4-inch) models. They not only look good but will save significant electricity for the same or even more light. The light they produce really looks pleasant, too!

They include power supplies so they'll plug in to existing 230V AC lighting circuits and come with spring-loaded mounting clips – all you need to is drill the appropriate hole and snap them into place.

The 4-inch model is priced at $42.00 + GST while the 6-inch sells for $55.00 + GST. If you have a lot of lights to install, ask Tenrod about quantity discounts.

Tenrod have offices in Sydney, Melbourne, Brisbane and Auckland.

Contact:
Tenrod Australia
U1&2, 24 Vore St, Silverwater NSW 2128
Tel: (02) 9748 0655 Fax: (02) 9748 0258
Website: **www.tenrod.com.au**

Cleverscope adds mask testing

Cleverscope has recently added Mask Testing to its application software.

Masks can be drawn by hand with a few points or generated automatically using a reference waveform. Failed signal areas are highlighted, and a green/red LED indication given. Masks can be applied to time and frequency displays. The maths equation builder can use mask test results and control digital outputs to provide real world failure indication. Masks, which can be saved to disk for later use, are useful for verifying production quality.

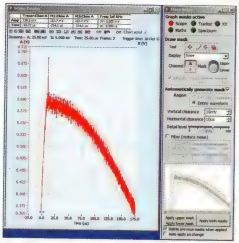

This example above is failing at the blue circled samples. The Graph masks active Scope graph is indicating fail (red).

Contact:
Cleverscope Ltd
28 Ranfurly Rd, Epsom, Auckland NZ
Tel: (0011 64 9) 524 7456
Website: **www.cleverscope.com**

Most inventors understand the importance of protecting their invention with a patent.

Did you know that if your invention or product were to go public without obtaining a patent, you could expose or even lose your rights to your invention?

Linkwell Lawyers assist businesses with advice and also reducing the costs in safeguarding the rights to their inventions. They specialise in applying for and obtaining international grants available for Australians, which could save businesses up to 90% of the costs associated with lodging patents.

Contact:
Linkwell Lawyers
Level 32, 101 Miller St, Nth Sydney NSW 2060
Tel: (02) 8923 2512 Fax: (02) 8923 2518
Website: **www.linkwells.com**

New Kingston Class 10 64GB microSDXC card

In the current age of smartphones and tablets, the need for more mobile data storage has become more important than ever. The Kingston microSDXC Class 10 card is available in 64GB capacity and offers additional storage for more music, videos, pictures and games.

Fully compliant with the latest SD Association specification, Kingston's micro Secure Digital eXtended Capacity (microSDXC) card operates on the exFAT file system, which is designed to handle extremely large volumes of data, such as files bigger than 4GB. They're especially suited to the latest smartphones and tablets.

As Class 10 devices, they deliver a 10MB/s minimum sustained transfer rate for optimum performance with microSDXC compatible devices. All cards are 100% tested and are backed by a lifetime warranty as well as free live technical support.

Contact:
Kingston Technology
Website: **www.kingston.com/en**

DROs from MachineryHouse for metalworking and woodworking machines

MachineryHouse has released a cost effective Digital Readout (DRO). The LCD display units are available in two or three axes and are ideal for use on metal or woodworking machines.

A digital readout helps take the guesswork out of measuring, making it easier and much more accurate than referring to your machine's scale or rule. The time they save in setting up will make them a worthwhile investment, not to mention the increased accuracy of the finished project.

The LCD digital counter is designed specifically for convenient display of X-Axis & Y-Axis or X-Y & Z-Axis machine movement when used with optional aluminium linear scales and measures in either metric or imperial.

The display unit incorporates a magnetic backing for convenient mounting on metal surfaces enabling the user to position in convenient location for easy viewing. Precise depth control floating zero allows you to set "zero" anywhere within operating range with a push of a button.

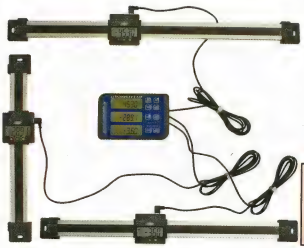

The scales are able to be cut to suit most machines and are available 300,400,600 & 1000mm lengths.

A two-axis version with two 300mm scales starts at $219 including GST.

Contact:
MachineryHouse
Sydney, Melbourne, Brisbane and Perth
Tel: 1300 909 111
Website: **www.machineryhouse.com.au**

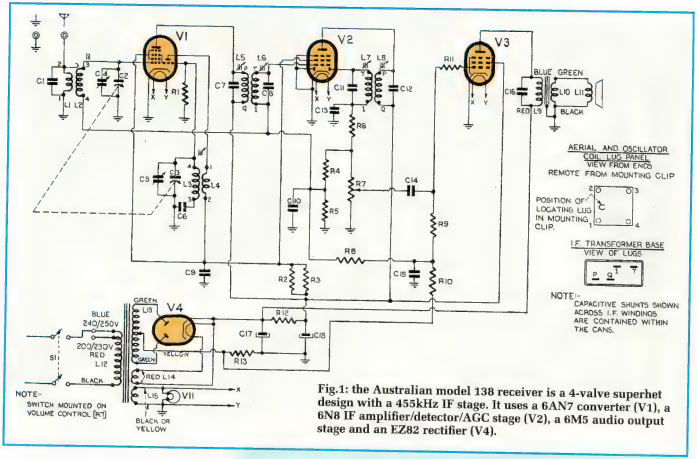

Fig.1: the Australian model 138 receiver is a 4-valve superhet design with a 455kHz IF stage. It uses a 6AN7 converter (V1), a 6N8 IF amplifier/detector/AGC stage (V2), a 6M5 audio output stage and an EZ82 rectifier (V4).

band. As with many receivers of this vintage, the antennas used were usually quite short (typically 6-7 metres) and were either run around a picture rail or along the floor beside the skirting board. As a result, the signal pick-up was nowhere near as good as from an external antenna around 30 metres long and 10 metres above ground.

Being resonant just below the broadcast band, the input tuned circuit boosted the pick-up of signals at the low-frequency end of the tuning range. By contrast, a small capacitor is used to boost the performance at the high-frequency end. It's shown on Fig.1 as a small hook that's adjacent to terminal 3 on the antenna coil.

In practice, this capacitor is just a short length of wire that runs from terminal 2 and finishes near the top of tuned winding L2. In addition, the antenna input signal is inductively coupled between L1 (the primary of the antenna coil) and the L2 secondary.

From there, the signal is tuned using variable capacitor C2 (and trimmer C4) and fed to the grid of V1, the 6AN7 converter valve. The local oscillator consists of V1 itself plus inductors L3 & L4 (the oscillator coil), capacitors C3, C5 & C6 and resistor R1. The tuning range of the receiver is 530-1620kHz.

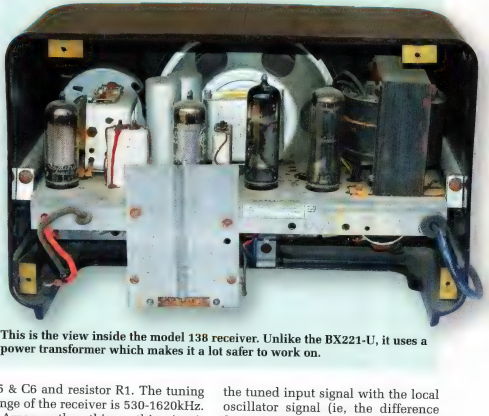

This is the view inside the model 138 receiver. Unlike the BX221-U, it uses a power transformer which makes it a lot safer to work on.

Among other things, this circuit produces a 455kHz IF (intermediate frequency) at V1's plate, due to mixing the tuned input signal with the local oscillator signal (ie, the difference frequency). This is then fed to the first IF transformer which consists of two tuned windings, ie, L5 & C7 and L6 &

The BX221-U chassis is more complicated than the model 138's and includes an extra valve plus a ferrite rod antenna for the long-wave & broadcast bands. There's no power transformer, so caution is required when working on this set.

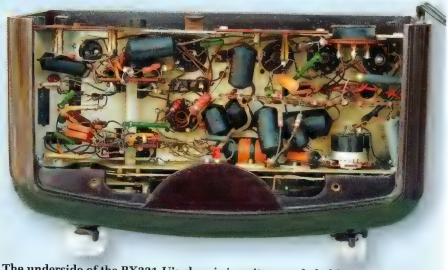

The underside of the BX221-U's chassis is quite crowded although access to individual parts is generally quite good.

C8. The filtered 455kHz IF signal is then fed to the signal grid of V2, a 6N8 duo-diode-pentode valve.

V2 amplifies the IF signal and its plate circuit drives the primary (L8) of the second 455kHz IF transformer. The tuned secondary (L7) then feeds the detector/AGC diode in V2.

The detected audio signal appears across resistor R6 and volume control R7. It's then taken from R7's wiper and fed to the grid of audio amplifier V3 (6M5) via C14 and R11. R11 is typically included in the grid circuit of audio output valves, particularly those with high gain. It has two purposes: (1) to minimise any parasitic oscillation in high-gain valves and (2) to attenuate any IF signal that may be present in the audio signal.

From my experience, attenuation of the IF signal is dramatically improved by connecting a 47pF capacitor between the grid of the audio output valve and earth. This also improves the stability of the IF amplifier stage in many receivers, as it prevents (or greatly reduces) radiated IF signals from the audio output stage from getting into the input of the IF amplifier.

The audio signal from R7 is amplified in V3 and then fed to the loudspeaker via an output transformer (L9). There is no negative feedback in this receiver since it doesn't have a lot of audio gain (there's only one audio amplifying stage).

Power supply

The power supply is quite conventional and is based on a power transformer and a full-wave rectifier (V4). The power transformer has a tapped primary winding that allows connection to voltages between 200V and 250V AC with mains frequencies

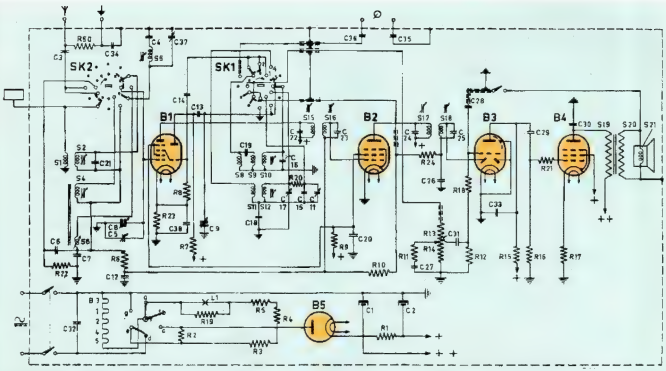

Fig.2: the Dutch BX221-U 3-band receiver is also a superhet design but has five valves, giving it better performance than the model 138. Note that this is a "hot-chassis" set, with one side of the mains connecting directly to the circuit earth (ie, there's no mains transformer).

between 40Hz and 60Hz. In addition, there are three secondary windings: two 6.3V heater windings and a centre-tapped high-tension (HT) winding.

The HT secondary voltage is rectified by V4 (EZ82). The resulting HT rail is filtered by C17 for the plate circuit of V3, while R12 and C18 provide extra filtering and decoupling for the plate circuits of V1 and V2. The screen circuits of V1 and V2 also get additional filtering using R2, R3 and C9. As a result, this set has good decoupling between the various stages.

A back bias voltage of -6.5V for the 6M5 is developed across resistor R13, while extra resistors provide a bias of -1V to V1 & V2 and around -0.2V to the detector/AGC diode in V2.

This means that under very weak or no-signal conditions, the receiver will be quiet as the detector/AGC diode will be back biased (ie, -0.2V). However, good radio signals (and noise) will quickly cause this cut-off bias to be exceeded and the AGC voltage to rise. Only around one fifth of the possible AGC voltage developed is used, so the converter and IF valves do not have their gain cut back as much as in a typical 5-valve receiver.

In suburban locations, this results in a higher output from the detector than is typical for 5-valve sets, which largely compensates for the lower gain of a single-stage audio amplifier.

The BX221-U circuit

Now let's take a look at the circuit for the Dutch BX221-U – see Fig.2. It's a very different receiver to the 138, although externally it looks almost identical. However, unlike the 138, the BX221-U has little lever arms behind each of its front-panel controls.

The lefthand end of the cabinet carries the on-off-volume control and this has a 2-position tone switch behind it. Similarly, the righthand end of the cabinet carries the tuning control and an associated wave-change switch lever.

As stated, the BX221-U is a 3-band design and tunes 150-261kHz (longwave), 517-1622kHz (broadcast band) and 5.94-18.2MHz (shortwave). Unfortunately, it's not easy to work out

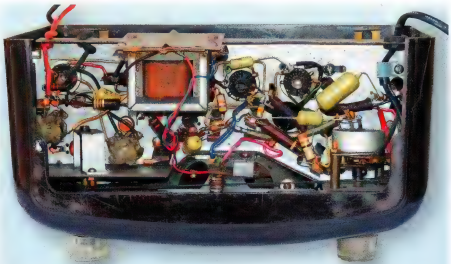

The model 138's chassis layout is much simpler than the BX221-U's layout, with no complicated band switching.

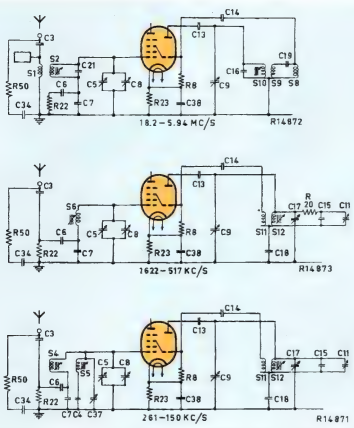

Fig.3: these diagrams show how the converter stage (V1) is wired for each of the three bands on the BX221-U. On shortwave (top), an internal foil-plate antenna is switched in but this is switched out for the broadcast (centre) and long-wave (bottom) bands and a ferrite-rod antenna used instead.

the switching arrangement for these three bands from the circuit diagram and this must have proved a problem for many servicemen without access to comprehensive service data.

Fortunately, the detailed service manual shows the way each front-end section is wired when each band is selected – see Fig.3. This makes it much easier to understand the set's operation on each band and makes servicing much easier.

On the shortwave band, an internal foil-plate antenna glued to the inside of the cabinet is used and an external antenna can also be attached. By contrast, on the other two bands, the foil-plate antenna is switched out and a ferrite-rod antenna rod is selected instead. This ferrite-rod antenna (see photo) is 250mm in length and is the longest I have seen. As before, an external wire antenna can also be used with the long-wave and broadcast bands.

Oscillator arrangements

Separate antenna coils are used for each band, with the long-wave and medium wave coils both wound on the ferrite rod antenna. The oscillator arrangements are also different.

Only one oscillator coil is used for the broadcast and long-wave bands and the circuit is typical for a broadcast-band oscillator. However, on the long-wave band, C11 and C15 are switched into circuit to lower the oscillator frequency and restrict its tuning range. For long-wave reception, the oscillator only tunes from 602-713kHz, whereas on the broadcast band it tunes from 969kHz to 2074kHz.

Converter stage B1, a UCH42 triode-hexode, amplifies the incoming tuned RF signal and mixes it with the oscillator signal to produce a number of frequencies. These are fed to the first IF transformer (S15 and S16 on Fig.2) which is tuned to the 452kHz IF (intermediate frequency) – ie, the difference between the tuned RF signal and the oscillator frequency.

The signal from this doubled-tuned IF transformer is fed to B2, a UF41 remote cut-off RF pentode, where it is amplified and then fed to the second IF transformer. From there, the signal is fed to a detector diode in valve B3, a UBC41 duo-diode-triode. The audio output from the detector then goes via the wave-change switch to B3's grid which provides the first stage of audio amplification.

As well as selecting bands, the wave-change switch also includes provision to select an external record player. However, because this is an AC/DC set (ie, hot chassis), both sides of the record player input are isolated by capacitors (C35 & C36) to prevent electric shock (ie, these capacitors are in series with both the active signal input and the earth side of the signal input).

Note that the external antenna and earth inputs are similarly isolated using capacitors.

Issues Getting Dog-Eared?

Keep your copies of SILICON CHIP safe, secure and always available with these handy binders

Available Aust. only. Price: $A14.95 plus $10 p&p per order (includes GST). Just fill in and mail the handy order form in this issue; or fax (02) 9939 2648; or call (02) 9939 3295 and quote your credit card number.

Following amplification in B3, the signal is fed to B4, a UL41 high-gain power output pentode. This then drives an audio output transformer and a 5Ω loudspeaker. A simple switched negative feedback/tone control circuit is wired between the speaker's voice coil and B3's grid. There is also some negative feedback due to the cathode resistor not having a filter capacitor wired across it.

Power supply

As stated above, this is a hot-chassis set, with one side of the mains directly connected to the circuit earth. There is no mains transformer, so you've got to really know what you are doing when servicing such sets. Electrocution can be fatal so the best advice is, "if in doubt, don't touch them".

The power supply is typical for an AC/DC set, with the heaters of the valves all wired in series and drawing around 0.1A. The voltages across the heaters are as follows: B1 = 14V, B2 = 12.6V, B3 = 14V, B4 = 45V and B5 = 31V, giving a total of 116.6V.

When powered from 110V AC (or thereabouts), the heater circuit is wired directly across the mains. However, for 220V AC, resistors are connected in series with the heater string.

B5, a UY41, is a half-wave rectifier. It produces a HT voltage of about 185V on its cathode when the set is connected to 220V AC mains. For 110V AC mains, the HT voltage could be as high as 154V but is more likely to be around 130V DC. And if the set is connected to 110V DC mains, the HT voltage is likely to be just 90V volts, so its performance will be limited.

In short, while the BX221-U can work on DC mains, it will perform much better on AC mains.

No back-bias network

The HT filter consists of the usual two electrolytic capacitors and a decoupling resistor. There is no back-bias network. Instead, B3 relies on contact potential bias at its grid, while B4 has cathode bias due to R17, a 150Ω resistor. Similarly, valve B1 is biased via its cathode resistor but B2 has no standing bias.

Instead, bias for B2 is obtained only when there is sufficient signal at the detector/AGC diode to cause it to conduct. The AGC system is a quite simple whereas other Philips sets usually have some form of delayed AGC and even quiet AGC (QAGC). Because the set will usually be tuned to a station, an AGC voltage (and hence bias) will normally be applied to B2. This may be satisfactory for domestic radio receivers but it would not be used with communications receivers.

Comparing the two receivers

As already pointed out, the Australian model 138 is a 4-valve receiver whereas the Dutch BX221-U is a 5-valve set. As a result, the BX221-U provides better performance in outlying areas away from radio stations.

Because it's a 3-band set, the dial-scale of the Dutch set is more complex than the 138. The service manual for the BX221-U runs to 12 pages, which is just as well because as with other European Philips sets, it's quite complex both electronically and physically.

By contrast, the service data for the model 138 runs to just three pages.

Restoration

The owner of these sets, John de Haas, has done some work on these receivers but there is still more to do. While the cabinets are generally in good condition, the bottoms have been scratched, although some of these scratches can be removed by polishing.

The wiring in both sets has been run using plastic-coated wire, so the insulation is still in good condition. However, any components that have deteriorated and/or are critical to safe and proper operation of the sets have been replaced.

Despite the age of these sets, alignment of the tuned circuits was not found to be necessary except for a few minor tweaks. And while the model 138 would be relatively easy to align, aligning the front end of the BX221-U is not a job to be taken lightly.

Summary

It's interesting to observe the different approaches taken by the European and Australian manufacturers of these two Philips sets. The Australian set is simpler, less costly to build and easier to service, while the Dutch set is more complex but is ultimately a better performer.

In addition, the BX221-U has three bands which makes it more versatile. So which one would I like in my collection? The answer is "both", because they are twins and we shouldn't separate twins! SC

OCEAN CONTROLS

Helping to put you in Control

Control Equipment

Ultrasonic Tank Level Sensor Maxbotix have released their industrial high resolution outdoor HRXL-MaxSonar-WR sensors. They have a range of 0 to 5metres and IP67 rating.
MXS-101 $119+GST

MiniPixel Controller Program it to do remote control. It features a Picaxe 18M2 and a 2 channel UHF transmitter and receiver. IP65 box available. Free software
PIX-0042 $99.50+GST

Arduino Leonardo The Leonardo uses the ATmega32U4 microcontroller with built in USB making it cheaper and simpler than other Arduinos.
SFA-106 $27.00+GST

Red Dot Matrix Display Connect this large, bright 512 LED matrix panel to your Arduino. Free software. Also available in Blue, Green, Yellow and White
FRA-014 $36.32+GST

PoE Gigabit Ethernet Unmanaged Switch 8-Port 10/100/1000Mbps Gigabit Ethernet ports. Supports PoE Power up to 30 Watts for each of the 4 PoE ports.
ATO-020 $599+GST

Large Universal Indicator Five 56mm high digit display accepts T/C RTD, 4-20mA and 0-5V signals. Fully programmable.
IPI-103 $399.00+GST

Head Mount RTD Temperature Sensor With a 316 stainless steel probe measuring 6 x 100mm and 4-20mA non isolated transmitter. Range is -50 to 300 degC.
NOS-0011 $139.00+GST

Contact Ocean Controls
Ph: 03 9782 5882
www.oceancontrols.com.au

SILICON CHIP PARTSHOP

Looking for a specialised component to build that latest and greatest *Silicon Chip* project? Maybe it's the PCB you're after. Or a pre-programmed micro. Or some other hard-to-get 'bit'. The chances are they are available direct from the ***Silicon Chip*** **PARTSHOP.**

As a service to readers, ***Silicon Chip*** has established the **PARTSHOP.** No, we're not going into opposition with your normal suppliers – this is a direct response to requests from readers who have found difficulty in obtaining specialised parts such as PCBs & micros.

- **PCBs are normally IN STOCK and ready for despatch when that month's magazine goes on sale (you don't have to wait for them to be made!).**
- **Even if stock runs out (eg, for high demand!), in most cases there will be no longer than a two-week wait.**
- **One low p&p charge: $10 per order, regardless of how many boards or micros you order! (Australia only; overseas clients – email us for a postage quote).**
- **Our PCBs are beautifully made, very high quality fibreglass boards with pre-tinned tracks, silk screen overlays and where applicable, solder masks.**
- **Best of all, those boards with fancy cut-outs or edges are already cut out to the *SILICON CHIP* specifications – no messy blade work required!**

PRINTED CIRCUIT BOARD TO SUIT PROJECT:	PUBLISHED:	PCB CODE:	Price:
AM RADIO TRANSMITTER	JAN 1993	06112921	$25.00
CHAMP: SINGLE CHIP AUDIO AMPLIFIER	FEB 1994	01102941	$5.00
PRECHAMP: 2-TRANSISTOR PREAMPLIER	JUL 1994	01107941	$5.00
HEAT CONTROLLER	JULY 1998	10307981	**$10.00**
MINIMITTER FM STEREO TRANSMITTER	APR 2001	06104011	$25.00
MICROMITTER FM STEREO TRANSMITTER	DEC 2002	06112021	$10.00
SMART SLAVE FLASH TRIGGER	JUL 2003	13107031	$10.00
12AX7 VALVE AUDIO PREAMPLIFIER	NOV 2003	01111031	$25.00
POOR MAN'S METAL LOCATOR	MAY 2004	04105041	$10.00
BALANCED MICROPHONE PREAMP	AUG 2004	01108041	$25.00
LITTLE JIM AM TRANSMITTER	JAN 2006	06101062	$25.00
POCKET TENS UNIT	JAN 2006	11101061	$25.00
STUDIO SERIES RC MODULE	APRIL 2006	01104061	$25.00
ULTRASONIC EAVESDROPPER	AUG 2006	01108061	$25.00
RIAA PREAMPLIFIER	AUG 2006	01108061	$25.00
GPS FREQUENCY REFERENCE (A) (IMPROVED)	MAR 2007	04103073	**$30.00**
GPS FREQUENCY REFERENCE DISPLAY (B)	MAR 2007	04103072	**$20.00**
KNOCK DETECTOR	JUNE 2007	05106071	$25.00
SPEAKER PROTECTION AND MUTING MODULE	JULY 2007	01207071	**$20.00**
CDI MODULE SMALL: PETROL MOTORS	MAY 2008	05105081	$15.00
LED/LAMP FLASHER	SEP 2008	11109081	$10.00
12V SPEED CONTROLLER/DIMMER	*(Use Hot Wire Cutter PCB from Dec 2010 (18112101))*		
CAR SCROLLING DISPLAY	DEC 2008	05101092	$25.00
USB-SENSING MAINS POWER SWITCH	JAN 2009	10101091	$45.00
DIGITAL AUDIO MILLIVOLTMETER	MAR 2009	04103091	$35.00
INTELLIGENT REMOTE-CONTROLLED DIMMER	APR 2009	10104091	$10.00
INPUT ATTENUATOR FOR DIG. AUDIO MYVOLTMETER	MAY 2009	04205091	$10.00
6-DIGIT GPS CLOCK	MAY 2009	04105091	$25.00
6-DIGIT GPS CLOCK DRIVER	JUNE 2009	07106091	$25.00
UHF ROLLING CODE TX	AUG 2009	15008091	$10.00
UHF ROLLING CODE RECEIVER	AUG 2009	15008092	$45.00
6-DIGIT GPS CLOCK AUTODIM ADD-ON	SEPT 2009	04206091	$10.00
STEREO DAC BALANCED OUTPUT BOARD	JAN 2010	01101101	$25.00
DIGITAL INSULATION METER	JUN 2010	04106101	$25.00
ELECTROLYTIC CAPACITOR REFORMER	AUG 2010	04108101	$25.00
ULTRASONIC ANTI-FOULING FOR BOATS	SEP 2010	04109101	$25.00
HEARING LOOP RECEIVER	SEP 2010	01209101	$25.00
S/PDIF/COAX TO TOSLINK CONVERTER	OCT 2010	01210101	$10.00
TOSLINK TO S/PDIF/COAX CONVERTER	OCT 2010	01210102	$10.00
DIGITAL LIGHTING CONTROLLER SLAVE UNIT	OCT 2010	16110102	$45.00
HEARING LOOP TESTER/LEVEL METER	NOV 2010	01111101	$25.00
UNIVERSAL USB DATA LOGGER	DEC 2010	04112101	$25.00
HOT WIRE CUTTER CONTROLLER	DEC 2010	18112101	**$10.00**
433MHZ SNIFFER	JAN 2011	06101111	$10.00
CRANIAL ELECTRICAL STIMULATION	JAN 2011	99101111	$30.00
HEARING LOOP SIGNAL CONDITIONER	JAN 2011	01101111	$30.00
LED DAZZLER	FEB 2011	16102111	$25.00
12/24V 3-STAGE MPPT SOLAR CHARGER	FEB 2011	14102111	$15.00
SIMPLE CHEAP 433MHZ LOCATOR	FEB 2011	06102111	$5.00
THE MAXIMITE	MAR 2011	06103111	$25.00
UNIVERSAL VOLTAGE REGULATOR	MAR 2011	18103111	$15.00
12V 20-120W SOLAR PANEL SIMULATOR	MAR 2011	04103111	$25.00
MICROPHONE NECK LOOP COUPLER	MAR 2011	01209101	$25.00
PORTABLE STEREO HEADPHONE AMP	APRIL 2011	01104111	$25.00
CHEAP 100V SPEAKER/LINE CHECKER	APRIL 2011	04104111	**$10.00**
PROJECTOR SPEED CONTROLLER	APRIL 2011	13104111	$10.00
SPORTSYNC AUDIO DELAY	MAY 2011	01105111	$30.00
100W DC-DC CONVERTER	MAY 2011	11105111	$25.00
PHONE LINE POLARITY CHECKER	MAY 2011	12105111	$10.00
20A 12/24V DC MOTOR SPEED CONTROLLER MK2	JUNE 2011	11106111	$25.00
USB STEREO RECORD/PLAYBACK	JUNE 2011	07106111	$25.00
VERSATIMER/SWITCH	JUNE 2011	19106111	$25.00
USB BREAKOUT BOX	JUNE 2011	04106111	$10.00

PRINTED CIRCUIT BOARD TO SUIT PROJECT:	PUBLISHED:	PCB CODE:	Price:
ULTRA-LD MK3 200W AMP MODULE	JULY 2011	01107111	$25.00
PORTABLE LIGHTNING DETECTOR	JULY 2011	04107111	$25.00
RUDDER INDICATOR FOR POWER BOATS (4 PCBs)	JULY 2011	20107111-4	$80 per set
VOX	JULY 2011	01207111	$25.00
ELECTRONIC STETHOSCOPE	AUG 2011	01108111	$25.00
DIGITAL SPIRIT LEVEL/INCLINOMETER	AUG 2011	04108111	$15.00
ULTRASONIC WATER TANK METER	SEP 2011	04109111	$25.00
ULTRA-LD MK2 AMPLIFIER UPGRADE	SEP 2011	01209111	$5.00
ULTRA-LD MK3 AMPLIFIER POWER SUPPLY	SEP 2011	01109111	$25.00
HIFI STEREO HEADPHONE AMPLIFIER	SEP 2011	01309111	**$30.00**
GPS FREQUENCY REFERENCE (IMPROVED)	SEP 2011	04103073	**$30.00**
DIGITAL LIGHTING CONTROLLER LED SLAVE	OCT 2011	16110111	$30.00
USB MIDIMATE	OCT 2011	23110111	$30.00
QUIZZING QUIZ GAME	OCT 2011	08110111	$25.00
ULTRA-LD MK3 PREAMP & REMOTE VOL CONTROL	NOV 2011	01111111	**$30.00**
ULTRA-LD MK3 INPUT SWITCHING MODUL	NOV 2011	01111112	$25.00
ULTRA-LD MK3 SWITCH MODULE	NOV 2011	01111113	$10.00
ZENER DIODE TESTER	NOV 2011	04111111	$20.00
MINIMAXIMITE	NOV 2011	07111111	$10.00
ADJUSTABLE REGULATED POWER SUPPLY	DEC 2011	18112111	$5.00
DIGITAL AUDIO DELAY	DEC 2011	01212111	$30.00
DIGITAL AUDIO DELAY Front & Rear Panels	DEC 2011	01212112P2/3	$20 per set
AM RADIO	JAN 2012	06101121	$10.00
STEREO AUDIO COMPRESSOR	JAN 2012	01201121	$30.00
STEREO AUDIO COMPRESSOR FRONT & REAR PANELS	JAN 2012	01201121P1/2	$20.00
3-INPUT AUDIO SELECTOR (SET OF 2 BOARDS)	JAN 2012	01101121/2	$30 per set
CRYSTAL DAC	FEB 2012	01102121	$20.00
SWITCHED EQUALIZATOR	FEB 2012	01202121	$5.00
SEMTEST LOWER BOARD	MAR 2012	04103121	$40.00
SEMTEST UPPER BOARD	MAR 2012	04103122	$40.00
SEMTEST FRONT PANEL	MAR 2012	04103123	$75.00
INTERPLANETARY VOICE	MAR 2012	08102121	$10.00
12/24V 3-STAGE MPPT SOLAR CHARGER REV.A	MAR 2012	14102112	$20.00
SOFT START SUPPRESSOR	APR 2012	10104121	$10.00
RESISTANCE DECADE BOX	APR 2012	04105121	$20.00
RESISTANCE DECADE BOX PANEL/LID	APR 2012	04105122	$20.00
1.5kW INDUCTION MOTOR SPEED CONTROLLER	APR 2012	10105122	$35.00
HIGH TEMPERATURE THERMOMETER MAIN PCB	MAY 2012	21105121	$30.00
HIGH TEMPERATURE THERMOMETER Front & Rear Panels	MAY 2012	21105122/3	$20 per set
MIX-IT-4 CHANNEL MIXER	JUNE 2012	01106121	$20.00
PIC/AVR PROGRAMMING ADAPTOR BOARD	JUNE 2012	24105121	$30.00
CRAZY CRICKET/FREAKY FROG	JUNE 2012	08109121	$10.00
CAPACITANCE DECADE BOX	JULY 2012	04106121	$20.00
CAPACITANCE DECADE BOX PANEL/LID	JULY 2012	04106122	$20.00
WIDEBAND OXYGEN CONTROLLER MK2	JULY 2012	05106121	$20.00
WIDEBAND OXYGEN CONTROLLER MK2 DISPLAY BOARD	JULY 2012	05106122	$10.00
SOFT STARTER FOR POWER TOOLS	JULY 2012	10107121	$10.00
DRIVEWAY SENTRY MK2	AUG 2012	05107121	$20.00
MAINS TIMER	AUG 2012	10108121	$10.00
CURRENT ADAPTOR FOR SCOPES AND DMMS	AUG 2012	04108121	$20.00
USB VIRTUAL INSTRUMENT INTERFACE	SEPT 2012	24109121	$30.00
USB VIRTUAL INSTRUMENT INT. FRONT PANEL	SEPT 2012	24109122	$30.00
BARKING DOG BLASTER	SEPT 2012	25108121	$20.00
COLOUR MAXIMITE	SEPT 2012	07109121	$20.00
SOUND EFFECTS GENERATOR	SEPT 2012	09109121	$10.00
NICK-OFF PROXIMITY ALARM	OCT 2012	03110121	$5.00
DCC REVERSE LOOP CONTROLLER	OCT 2012	09110121	$10.00
LED MUSICOLOUR	NOV 2012	16110121	$25.00
LED MUSICOLOUR Front & Rear Panels	NOV 2012	16110121	$20 per set
CLASSIC-D CLASS D AMPLIFIER MODULE	NOV 2012	01108121	$30.00
CLASSIC-D 2 CHANNEL SPEAKER PROTECTOR	NOV 2012	01108122	$10.00
HIGH ENERGY ELECTRONIC IGNITION SYSTEM	DEC 2012	05110121	$10.00
USB POWER MONITOR	DEC 2012	04109121	$10.00

PCB prices shown in GREEN are new lower prices – our bulk buying savings are passed on to you!

NOTE: These listings are for the PCB only – *not a full kit.* **If you want a kit, contact the kit suppliers advertising in this issue.**

AND NOW THE PRE-PROGRAMMED MICROS, TOO!

Some micros from copyrighted and/or contributed projects may not be available.

As a service to readers, *SILICON CHIP* stocks microcontrollers and microprocessors *used in new projects* (from 2012 on) and some selected older projects – **pre-programmed and ready to fly!**

Price for any of these micros is just $15.00 each + $10 p&p per order#

PIC12F675	UHF Remote Switch (Jan09), Ultrasonic Cleaner (Aug10), Ultrasonic Anti-fouling (Sep10), CricketFrog (Jun12)
PIC16F1507-I/P	Wideband Oxygen Sensor (Jun-Jul12)
PIC16F88-E/P	Projector Speed (Apr11), Vox (Jun11), Ultrasonic Water Tank Level (Sep11), Quizzical (Oct11) Ultra LD Preamp (Nov11) Hi Energy Ignition (Nov/Dec12)
PIC16F877A-I/P	6-Digit GPS Clock (May-Jun09), Lab Digital Pot (Jul10) Semtest (Feb-May12)
PIC18F2550-I/SP	Batt Capacity Meter (Jun09), Intelligent Fan Controller (Jul10)
PIC18F45K80	USB Power Monitor (Dec12)
PIC18F4550-I/P	GPS Car Computer (Jan10), GPS Boat Computer (Oct10)
PIC18F14K50	USB MIDIMate (Oct11)
PIC18F27J53-I/SP	USB Data Logger (Dec10-Feb11)
PIC18LF14K22	Digital Spirit Level (Aug11), G-Force Meter (Nov11)
PIC18F1320-I/SO	Intelligent Dimmer (Apr09)
PIC32MX795F512H-80I/PT	Maximite (Mar11), miniMaximite (Nov11), Colour Maximite (Sept/Oct12)
dsPIC33FJ128GP802-I/SP	Digital Audio Signal Generator (Mar-May10), Digital Lighting Controller (Oct-Dec10), SportSync (May11), Digital Audio Delay (Dec11) Level (Sep11) Quizzical (Oct11), Ultra-LD Preamp (Nov11), LED Musicolour (Nov12)
dsPIC33FJ64MC802-E/SP	Induction Motor Speed Controller (Apr-May12)
ATTiny861	VVA Thermometer/Thermostat (Mar10), Rudder Position Indicator (Jul11)
ATTiny2313	Remote-Controlled Timer (Aug10)
ATMega48	Stereo DAC (Sep-Nov09)
ISL59S036P3	IGBT to suit High Energy Electronic Ignition (Nov/Dec12) – ***$10.00 + p&p***

When ordering, be sure to nominate BOTH the micro required and the project for which it must be programmed.

Other items currently in the PartShop: **P&P – $10 Per order within Australia.**

G-FORCE METER/ACCELEROMETER SHORT FORM KIT (contains PCB (04108111), programmed PIC micro, MMA8451Q accelerometer chip and 4 MOSFETS)	AUG 2011/NOV 2011	$44.50	
RADIO & HOBBIES ON DVD-ROM (Needs PC to play!)	n/a	$62.00	
AMATEUR SCIENTIST VOL4 ON CD	n/a	$62.00	
TENDA USB/SD AUDIO PLAYBACK MODULE (TD896 *or* 898)	JAN 2012	$33.00	
JST CONNECTOR LEAD 3-WAY	JAN 2012	$4.50	
JST CONNECTOR LEAD 2-WAY	JAN 2012	$3.45	

Prices include GST and are valid only for month of publication of these lists; thereafter are subject to change without notice. *Note: P&P is extra ($10 per order in Australia).

Orders may be for mixed items (eg, you can order one PCB, or one microprocessor, or three PCBs and two microprocessors – and the P&P on any of these orders is $10.00

12 /12

SILICON CHIP Order Form

Your Name:

Your Address:

Postcode:

Country:

Telephone No: Fax No:

Email Address:

Please supply:

Qty	Item Description	Item Price	P&P	Total Price
			$10.00	
			No extra P&P charge for additional items on one order – valid within Australia only. Overseas orders: please email us for P&P quote.	
Thank you for your order.			**TOTAL $A**	

Payment options:

- EFT/Bank Deposit: Silicon Chip BSB 012-243 A/C 2636-80001 *Please confirm transfer by email to silicon@siliconchip.com.au or fax 02 9939 2648*
- PayPal: From your PayPal account: "Send Money" to **silicon@siliconchip.com.au**
- Cheque/Money Order/Bank Draft: payable to Silicon Chip (Australian dollars only) *Mail to Silicon Chip, PO Box 139 Collaroy NSW 2097 Australia*
- Credit Card (see below; Visa and Mastercard ONLY): *Fax to 02 9939 2648, telephone 02 9939 3295 or mail or email to above address.*

If paying by **Visa or Mastercard** please enter your details below **(we DO NOT accept Amex, Diners or other credit cards)**

Card No: | | | | – | | | | – | | | | – | | | | Expiry Date: | | / | |

Cardholder Name: Signature:

To Place Your Order:

eMAIL (24/7) silicon@siliconchip.com.au with order & credit card details

OR

FAX (24/7) This form (or a photocopy) to (02) 9939 2648 with all details

OR

PAYPAL (24/7) Use PayPal to pay silicon@siliconchip.com.au

OR

PHONE - (9-5, Mon-Fri) Call (02) 9939 3295 with your credit card details

OR

MAIL This form to PO Box 139, Collaroy NSW 2097

*ALL ITEMS SUBJECT TO AVAILABILITY. PRICES VALID FOR MONTH OF MAGAZINE ISSUE ONLY. ALL PRICES IN AUSTRALIAN DOLLARS AND INCLUDE GST WHERE APPLICABLE.

12/12

ASK SILICON CHIP

Got a technical problem? Can't understand a piece of jargon or some technical principle? Drop us a line and we'll answer your question. Write to: Ask Silicon Chip, PO Box 139, Collaroy Beach, NSW 2097 or send an email to silicon@siliconchip.com.au

Low battery alarm for a boat

I am looking for a circuit that will sound an alarm when the 12V battery in my boat gets down to a preset value in the range 10.0V to 11.5V. Can you help please? (G. C., Mt Dandenong, Vic).

● We have done several projects that are suitable: the Micropower Battery Protector from July 2004, the Battery Sentry from May 2002 and the Voltage Switch from December 2008.

These all switch when the battery drops below a set threshold and can be used to drive an alarm such as a piezo siren. The first two-mentioned projects are designed to switch off an appliance when the battery voltage drops below the threshold.

Speed control for a child's car

A friend recently purchased a Power Wheels ride-on car (made by Fisher Price) for his grandchild. If you are not familiar with these, they are a ride-on vehicle for kids aged 3-4 upward. They are powered from a 12V 9Ah SLA battery. Two small 12V motors drive the rear wheels, each via their own gearbox.

The accelerator, or should I say power switch, supplies the motors through a DPDT changeover switch for forward/reverse control. As well, another DPDT switch selects the motors in series or parallel, to give high/low speed ranges. The problem he has found is that the accelerator is too abrupt and the kids have lost confidence. I would also consider this action harsh on the motors/gear boxes.

Searching through back issues of SILICON CHIP, I came across your 20A 12/24V DC Motor Speed Controller Mk.2 (June 2011). Naturally, I was most interested in the soft start feature. I'm not sure what the current draw of the drive motors is. I have seen some values on the net but the value would obviously fluctuate as the motors encountered different loads, child's weight and terrain etc.

If the average current draw was close to the rated 20A of this circuit, do you consider this controller would be appropriate? If so, I considered the 20A fuse (F1) could be changed to an automotive thermal type self-resetting circuit breaker. Also could the 10µF capacitor (above link 1) be altered to vary the soft-start time period? (A. D., via email).

● The DC Motor Speed Controller Mk.2 should be suitable. The current limit of the controller was mainly due to the PCB track current rating, not the Mosfets. The fuse should be a fast-blow type.

There are several ways the controller could be used in your application. One way, as you suggest, is to have the soft-start operate every time the throttle is pressed to switch on power. The 10µF soft-start capacitor can be reduced or increased for the required soft-start rate. Unfortunately, this capacitor has to be discharged each time power is applied to ensure the full soft-start. This discharge may not occur for rapid stop/start throttle operation.

Alternatively, the throttle of the vehicle (switch) could be replaced by a potentiometer that's wired into the VR1 position of the controller circuit.

Measuring battery internal resistance

I would like to build an ESR meter to measure the internal resistance of a lead-acid battery. Would the one featured in April 2004 do this? If not,

Using The SoftStarter With An Inverter

Congratulations on the SoftStarter articles. Does it follow that this device would also help protect inverter-based off-grid solar power systems from heavy loads and help start heavy loads that might otherwise be rejected due to high in-rush current? (F. S., Wellington, New Zealand).

● The Soft Starters certainly can be used in conjunction with 230VAC inverters, whether they are run from a solar system, batteries or whatever.

Depending on the exact nature of the load, they may allow an inverter to start with a load that would otherwise trip it (ie, the inverter) off due to an over-current condition. This would be most applicable for loads which draw a very high current for a brief period at start-up, especially anything with a switchmode power supply but possibly also devices with motors, especially if they start on-load (eg, driving a compressor).

For equipment with switchmode supplies, the first SoftStarter from April 2012 would probably do the job as these generally only draw a lot of current when they are first switched on and the capacitors charge up. For motorised equipment such as refrigerators, the Soft Starter for Power Tools from July 2012 would be a better choice as this will then limit the inrush current each time the motor starts.

Depending on the inverter, load and so on, it's possible that even with the SoftStarter it could still trip the inverter off. This could be the case if the NTC thermistor's initial resistance is too low to limit the current sufficiently or if the load's in-rush is long enough that either the thermistor heats or the relay clicks on before the current flow drops to a level that the inverter can supply.

You should also consider the general rule that you should have as a big an inverter as you can afford.

Crystal DAC Upgrade Adjustment Problem

After assembling the boards for the SILICON CHIP Stereo DAC, I tested the input board first and found it functioned just as described in the articles from 2009. However, on connecting the Crystal DAC board (February 2012), I found I could not adjust the trimpots to provide the specified 20mV across the output stage emitter resistors. Regardless of where I turned the trimpots, I could not obtain more than about 1.5mV at test points 1 & 2 and a maximum of about 5mV at test points 3 & 4.

These measurements were confirmed with two different multimeters, both in proper working order and with new batteries.

Is 500Ω the correct value for the trimpot? That is the value shown in the circuit diagram, parts list and on the PCB but the photograph of the completed board in the recent article clearly shows trimpots with "502" printed on them. Is this not 5kΩ?

Using an analog multimeter, I made back-to-back measurements of all transistors in circuit (base to emitter and collector both ways) and found no evidently defective device; ditto for all diodes. (R. C., Lyneham, ACT).

- As you have surmised, the correct value for the trimpots is 5kΩ (code: 502). The author originally tried 500Ω on the prototype and decided to change it to 5kΩ but forgot to update the circuit.

Also, be sure to check the errata in the June & July 2012 issues as there were some other minor mistakes in the article and early PCBs. This included the connections to the trimpots being reversed.

would it be possible for you to do an article in your magazine in the future or maybe inform me as to where I might get a circuit diagram for the instrument I require? (R. D., Childers, Qld).

- That ESR meter is intended for measuring the internal resistance of electrolytic capacitors. If you want to check lead-acid batteries, have a look at the Lead-Acid Battery Condition Checker in the August 2009 issue. This is available in kit form from Altronics and Jaycar.

Input priority for a mixer circuit

I'm thinking of building yet another of your projects, the "Mix-It!" audio mixer (SILICON CHIP, June 2012). One feature that would make it more useful in my application would be the ability for a signal on one (priority) input to mute the remaining inputs.

I can't find any previously published auto-mute circuits in SILICON CHIP. Is there a simple circuit that could be retrofitted to the Mix-It? Many thanks for all the happy hours you've provided over the years. (T. P., Auckland, New Zealand).

- The easiest way to do what you want is to use a Voice Operated Switch or VOX. We published one in the July 2011 issue of SILICON CHIP. The VOX detects the presence of a sound and switches a relay. So you could use that to disconnect the other channels when a sound is present on the high-priority channels.

To avoid the sound of a clicking relay and so that you can easily mute multiple channels, you may want to modify the VOX to use a 4066B quad analog switch IC. The easiest way to do this would be:

(1) Run the VOX circuit and mixer from a common DC supply (eg, 12V DC).

(2) Don't install the VOX relay.

(3) Build the 4066B portion of the circuit on a piece of Veroboard or similar, mounted close to the mixer PCB. Insert three of the 4066 channels in series with the mix resistors of the three channels you want to auto-mute.

(4) Power the 4066B from the same DC supply. Remember to include a bypass

ANTRIM TRANSFORMERS
manufactured in Australia by
Harbuch Electronics Pty Ltd
harbuch@optusnet.com.au

Toroidal – Conventional Transformers
Power – Audio – Valve – 'Specials'
Medical – Isolated – Stepup/down
Encased Power Supplies

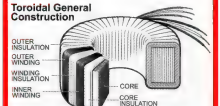

Comprehensive data available:
www.harbuch.com.au
Harbuch Electronics Pty Ltd
9/40 Leighton Pl, HORNSBY 2077
Ph (02) 9476 5854 Fax (02) 9476 3231

WARNING!

SILICON CHIP magazine regularly describes projects which employ a mains power supply or produce high voltage. All such projects should be considered dangerous or even lethal if not used safely.

Readers are warned that high voltage wiring should be carried out according to the instructions in the articles. When working on these projects use extreme care to ensure that you do not accidentally come into contact with mains AC voltages or high voltage DC. If you are not confident about working with projects employing mains voltages or other high voltages, you are advised not to attempt work on them. Silicon Chip Publications Pty Ltd disclaims any liability for damages should anyone be killed or injured while working on a project or circuit described in any issue of SILICON CHIP magazine.

Devices or circuits described in SILICON CHIP may be covered by patents. SILICON CHIP disclaims any liability for the infringement of such patents by the manufacturing or selling of any such equipment. SILICON CHIP also disclaims any liability for projects which are used in such a way as to infringe relevant government regulations and by-laws.

Advertisers are warned that they are responsible for the content of all advertisements and that they must conform to the Competition & Consumer Act 2010 or as subsequently amended and to any governmental regulations which are applicable.

Using the SoftStarter In An Active Loudspeaker System

I want to build the SoftStarter in the April 2012 issue but I don't want to use a mechanical relay. I want to use it for the power supply in my active speakers and there are enough relays in there already. Is it possible to use a solid-state relay (SSR)? I have two types; 10A and 25A with DC switching, so it should work.

Are any modifications to the circuit required? From my (limited) experience, it seems as though the 250VAC capacitor and diode D5 can be omitted. Is this so? Also, can a different thermistor be substituted; one with a higher cold resistance but with the same voltage ratings? (F. C., Port Melbourne, Vic).

● It should be possible to use an SSR in place of the mechanical relay in the SoftStarter but there are some disadvantages to doing so. They usually contain a Triac and these normally have an on-saturation voltage of around 1V.

This means that the parallel NTC thermistor will carry some current even when the solid-state relay is on. If the relay switches off and then on again soon after, the thermistor won't have cooled down fully and so will not limit the in-rush current to quite the same degree as it would if you were using a mechanical relay.

Also, because of this on-saturation voltage, a solid-state relay will tend to dissipate more (about 1W per amp of load current). In your application, the average load current is relatively low (<1A) so that isn't a big problem but you should be aware of it.

You will likely have to mount the SSR off-board so be careful with the wiring and ensure the wires are mains-rated and can handle the expected maximum load current.

You could leave out D5 if you are using a solid-state relay although we don't think there's much point – it doesn't hurt to have it there and it isn't an expensive part.

You can't leave out the 250VAC X2 capacitor although you could perhaps reduce it a little in value; try 100nF instead of 150nF. Depending on the SSR you use, it may not draw as much "coil current" as the specified relay and that should allow you to get away with a lower value X2 capacitor.

You certainly can substitute a different NTC thermistor (regardless of what type of relay you use) as long as it is rated to handle the full mains voltage and it has a sufficient current/dissipation rating to survive the high-current pulses it will be subjected to. The specified thermistor is rated for 15A steady state current.

We would hesitate to use a thermistor with less than half that rating in case it would be damaged by the sudden internal heating it will experience.

capacitor on the Veroboard.
(5) Connect all four of the 4066B's control channels together and wire them to the collector of Q1 on the VOX board.
(6) Connect the input of the VOX circuit to the high-priority signal input on the mixer.

This way, when a signal is present on the high priority input, the VOX will turn Q1 on, pulling the 4066B's control lines low. This will turn off the three channels, preventing the other mixer inputs signals from being mixed into the output. LED2 on the VOX PCB will light up.

When there is no signal at the high priority input, Q1 will switch off and LED2 will pull the 4066B inputs high, enabling the other mixer channels. LED2 will remain off.

Using a 10W panel for the solar lighting system

Instead of using the recommended 5W panel in the Solar Lighting System (Silicon Chip, May & June 2010) can I hook up a 10W unit instead? The reason is that I would like to have an output of more than 2.5 hours (let's say at least six hours) which I believe would require an additional battery or the capability to charge a higher-capacity battery. I am considering this kit as a controller for my garden/security light. (R. E., via email).

● The project was designed for a 5W solar panel. To use a 10W panel, the gain of IC2b will need to be reduced using a 47kΩ feedback resistor instead of the 100kΩ resistor between pins 6 & 7. Additionally, the 470µF 35V low-ESR capacitors should be paralleled with identical types on the input and output sides of Q1 & L1.

Mains timer for a radiator in a bedroom

The Mains Timer from the August 2012 issue looks to be just what I need to turn off my father's heater after he goes to bed. We have a commercially available timer at the moment which works well but when he tries to turn it on himself, he gets confused.

He is 92 years old and pushes buttons at random, usually undoing all the settings in the process. What you have looks a lot simpler. My thought was to use a cable with a male power plug that goes into a switch and into the input of your unit. The output simply goes to a GPO into which I can plug the heater. I want to set it for 1.5 hours.

Would the timing capacitor have to be about 500nF or so? Is the relay OK for a 2kW heater? Is this the best solution? (G. B., Emerald, Vic).

● Yes, you can use the Timer for Fans and Lights to run a heater. You'll probably want to put it into a sturdy case with a chassis-mount or surface-mounting mains socket on it. If you have a mains cord exiting the case, be sure to clamp it properly (eg, with a cord-grip grommet) so it can't be pulled out.

For a 1.5-hour delay, a 470nF timing capacitor should be about right, in combination with link LK1.

The specified relay is rated for 1250VA so do not use it for a 2kW heater. There are alternatives available rated for 10A/2500VA such as the NTE R25-11D10-24 (element14 Cat. 1383877). This should be a drop-in replacement as besides the current rating, it is virtually identical to the 5A relay we used.

This project should be suitable for your application but you may want to make one small change to the circuit. You want the timer to start running as soon as mains power is applied to the unit (via the wall switch) while in the original application, it is controlled by a separate switch.

You should be able to achieve this

by omitting diode D8 and moving the 1nF capacitor from the location shown in the article to the adjacent, unmarked set of pads on the PCB. We haven't tried this but in theory this triggers the timer immediately when power is applied and the timer then runs for the set period and turns the load off. When this happens, diode D9 should conduct, preventing the timer from running and thus the heater should stay off until the mains is switched off at the wall and then back on again.

If you build the unit without its own switch (ie, relying on the upstream mains switch), then you will not only have to move the 1nF capacitor as mentioned but also the incoming mains should go to the Asw terminal on the PCB, with the Aperm terminal not connected to anything. Otherwise, the unit will never switch on.

Note that with this configuration, the timer draws power even when the load is off but it isn't much (about 1W) and it should not a problem in your situation.

FFTs in the LED Musicolour

I am very interested in LED Musicolour featured in the October 2012 issue. I sing with a senior chorus but because of my technical background, I also handle their sound equipment

I have been looking around for a better way to monitor frequency and intensity of the sound output from a mixer/amplifier unit and the article by Nicholas Vinen strikes a chord.

To just monitor live music and singing is only a fraction of the unit's capabilities. My knowledge of DFFTs is rusty; are the frequency and amplitude scales logarithmic? (J. W., via email).

- The output of the 1024 sample FFT is 512 bins which represent linear slices of frequency. With a sampling rate of 44.1kHz, the bins are 0-43Hz, 43-86Hz . . . 21,964Hz-22,007Hz, 22,007Hz-22,050Hz. (It appears that the other 512 bins are just the complex conjugates of the first 512).

The software averages them in logarithmic groupings to give the roughly logarithmic relationship between each LED strip. The first few groups are just the bottom few FFT bins but at higher frequencies several bins are being averaged to get reasonably even energy coverage per strip.

The content of each bin is a vector and its magnitude represents the amplitude of the underlying signal in a linear fashion. We are not using any additional log/square root function in an attempt to show power; it seems to work OK to just translate the linear value into LED duty cycle. (The vector direction indicates phase but that isn't very useful in this sort of application so it is ignored).

Interfacing to the Induction Motor Speed Controller

I have a 0-10V speed control signal coming from a control board. How do I convert this to a 0-3.3V signal for the Induction Motor Speed Controller project? I am hoping to replace a frequency drive on a paper unwinder with this project. (J. B., via email).

- Just use a voltage divider. We hesitate to recommend resistor values because we don't know the output impedance of your device. However, as an example, you could use a 5kΩ pot with its wiper connected to V_{in} of CON4, its lower end connected to GND of CON4 and a series 10kΩ resistor from your 0-10V source to the top of the potentiometer.

Modification for the Hearing Loop Receiver

I would like to express my appreciation for your excellent and much-needed series on Inductive Hearing Loops. With reference to the Hearing Loop Receiver, would it not be feasible to fit two inductors (L1) at right angles to minimise the effects of the orientation of the unit relative to the plane of the loop? (G. E., via email).

- A second inductor could be included at right angles to the other

continued on page 112

Radio, Television & Hobbies: the COMPLETE archive on DVD

This remarkable collection of PDFs ***covers every issue*** of R & H, as it was known from the beginning (April 1939 – price sixpence!) right through to the final edition of R, TV & H in March 1965, before it disappeared forever with the change of name to EA.

For the first time ever, complete and in one handy DVD, every article and every issue is covered.

If you're an old timer (or even young timer!) into vintage radio, it doesn't get much more vintage than this. If you're a student of history, this archive gives an extraordinary insight into the amazing breakthroughs made in radio and electronics technology following the war years. And speaking of the war years, R & H had some of the best propaganda imaginable!

Even if you're just an electronics dabbler, there's something here to interest you.

Please note: this archive is in PDF format on DVD for PC. Your computer will need a DVD-ROM or DVD-recorder (not a CD!) and Acrobat Reader 6 or above (free download) to enable you to view this archive. This DVD is NOT playable through a standard A/V-type DVD player.

ONLY $62.50 + $11.00 P&P

Exclusive to: SILICON CHIP

HERE'S HOW TO ORDER YOUR COPY:

BY PHONE:* (02) 9939 3295 9-5 Mon-Fri

BY FAX:# (02) 9939 2648 24 Hours 7 Days

BY EMAIL:# silcon@siliconchip.com.au 24 Hours 7 Days

BY MAIL:# PO Box 139, Collaroy NSW 2097

BY INTERNET:^ siliconchip.com.au 24 Hours 7 Days

* Please have your credit card handy! # Don't forget to include your name, address, phone no and credit card details. ^ You will be prompted for required information

SILICON CHIP REFERENCE BOOKSHOP

Save 10%

WANT TO SAVE 10%? SILICON CHIP (PRINT EDITION) SUBSCRIBERS* AUTOMATICALLY QUALIFY FOR A 10% DISCOUNT ON ALL BOOK PURCHASES!

*(Does not apply to website orders)

PROGRAMMING and CUSTOMIZING THE PICAXE

By David Lincoln (2nd Ed, 2011) **$65.00**

A great aid when wrestling with applications for the PICAXE series of microcontrollers, at beginner, intermediate and advanced levels. Every electronics class, school and library should have a copy, along with anyone who works with PICAXEs. 300 pages in paperback

See Review April 2011

PIC IN PRACTICE

by D W Smith. 2nd Edition - published 2006 **$60.00**

Based on popular short courses on the PIC, for professionals, students and teachers. Can be used at a variety of levels. An ideal introduction to the world of microcontrollers. 255 pages in paperback.

PIC MICROCONTROLLER – your personal introductory course

By John Morton 3rd edition 2005. **$60.00**

A unique and practical guide to getting up and running with the PIC. It assumes no knowledge of microcontrollers – ideal introduction for students, teachers, technicians and electronics enthusiasts. Revised 3rd edition focuses entirely on re-programmable flash PICs such as 16F54, 16F84 12F508 and 12F675. 226 pages in paperback.

OP AMPS FOR EVERYONE

By Carter & Mancini – 3RD EDITION **$100.00**

Substantially updates coverage for low-speed and high-speed applications, and provides step-by-step walk-throughs for design and selection of op amps. Huge 648 pages!

PROGRAMMING 32-bit MICROCONTROLLERS IN C

By Luci di Jasio (2008) **$79.00**

Subtitled Exploring the PIC32, a Microchip insider tells all on this powerful PIC! Focuses on examples and exercises that show how to solve common, real-world design problems quickly. Includes handy checklists. FREE CD-ROM includes source code in C, the Microchip C30 compiler, and MPLAB SIM. 400 pages paperback.

PIC MICROCONTROLLERS: know it all

Multiple authors **$83.00**

The best of subjects Newnes authors have written over the past few years, combined in a one-stop maxi reference. Covers introduction to PICs and their programming in Assembly, PICBASIC, MBASIC & C. 900+ pages in paperback.

USING UBUNTU LINUX

by J Rolfe & A Edney – published 2007 **$27.00**

Ubuntu Linux is a free and easy-to-use operating system, a viable alternative to Windows and Mac OS. Introduces Ubuntu, tells how to set it up, covers the various Open Office applications and gives troubleshooting hints and tips. Highly recommended. 222 pages in paperback

DVD PLAYERS AND DRIVES

by K.F. Ibrahim. Published 2003. **$71.00**

A guide to DVD technology and applications, with particular focus on design issues and pitfalls, maintenance and repair. Ideal for engineers, technicians, students of consumer electronics and sales and installation staff. 319 pages in paperback.

See Review Feb 2004

ELECTRIC MOTORS AND DRIVES

By Austin Hughes - Third edition 2006 **$51.00**

Intended for non-specialist users of electric motors and drives, filling the gap between academic texts and general "handbooks". Explores all of the widely-used modern types of motor and drive including conventional & brushless DC, induction motors, steppers, servos, synchronous and reluctance. 384 pages, soft cover.

AC MACHINES

By Jim Lowe Published 2006 **$66.00**

Applicable to Australian trades-level courses including NE10 AC Machines, NE12 Synchronous Machines and the AC part of NE30 Electric Motor Control and Protection. Covering polyphase induction motors, single-phase motors, synchronous machines and polyphase motor starting. 160 pages in paperback.

SELF ON AUDIO

by Douglas Self 2nd Edition 2006 **$69.00**

A collection of 35 classic magazine articles offering a dependable methodology for designing audio power amplifiers to improve performance at every point without significantly increasing cost. Includes compressors/limiters, hybrid bipolar/FET amps, electronic switching and more. 474 pages in paperback.

SMALL SIGNAL AUDIO DESIGN

By Douglas Self – First Edition 2010 **$88.00**

The latest from the Guru of audio. Explains audio concepts in easy-to-understand language with plenty of examples and reasoning. Inspiration for audio designers, superb background for audio enthusiasts and especially where it comes to component peculiarities and limitations. Expensive? Yes. Value for money? YES! Highly recommended. 558 pages in paperback.

AUDIO POWER AMPLIFIER DESIGN HANDBOOK

by Douglas Self – 5th Edition 2009 **$81.00**

"The Bible" on audio power amplifiers. Many revisions and updates to the previous edition and now has an extra three chapters covering Class XD, Power Amp Input Systems and Input Processing and Auxiliarly Subsystems. Not cheap and not a book for the beginner but if you want the best reference on Audio Power Amps, you want this one! 463 pages in paperback.

See Review March 2010

PRACTICAL GUIDE TO SATELLITE TV

By Garry Cratt – Latest (7th) Edition 2008 **$49.00**

Written in Australia, for Australian conditions by one of Australia's foremost satellite TV experts. If there is anything you wanted to know about setting up a satellite TV system, ((including what you can't do!) it's sure to be covered in this 176-page paperback book.

NEWNES GUIDE TO TV & VIDEO TECHNOLOGY

By KF Ibrahim 4th Edition (Published 2007) **$49.00**

It's back! Provides a full and comprehensive coverage of video and television technology including HDTV and DVD. Starts with fundamentals so is ideal for students but covers in-depth technologies such as Blu-ray, DLP, Digital TV, etc so is also perfect for engineers. 600+ pages in paperback.

RF CIRCUIT DESIGN

by Chris Bowick, Second Edition, 2008. **$63.00**

The classic RF circuit design book. RF circuit design is now more important that ever in the wireless world. In most of the wireless devices that we use there is an RF component – this book tells how to design and integrate in a very practical fashion. 244 pages in paperback.

SWITCHING POWER SUPPLIES A-Z

by Sanjaya Maniktala, Published April 2012. **$83.00**

Thoroughly revised! The most comprehensive study available of theoretical and practical aspects of controlling and measuring EMI in switching power supplies.

NEW 2012 EDITION

PRACTICAL RF HANDBOOK

by Ian Hickman. 4th edition 2006 **$61.00**

A guide to RF design for engineers, technicians, students and enthusiasts. Covers key topics in RF: analog design principles, transmission lines, couplers, transformers, amplifiers, oscillators, modulation, transmitters and receivers, propagation and antennas. 279 pages in paperback.

PRACTICAL VARIABLE SPEED DRIVES & POWER ELECTRONICS

by Malcolm Barnes. 1st Ed, Feb 2003. **$73.00**

An essential reference for engineers and anyone who wishes to design or use variable speed drives for induction motors. 286 pages in soft cover.

See Review Feb 2003

BUILD YOUR OWN ELECTRIC MOTORCYCLE

by Carl Vogel. Published 2009. **$40.00**

Alternative fuel expert Carl Vogel gives you a hands-on guide with the latest technical information and easy-to-follow instructions for building a two-wheeled electric vehicle – from a streamlined scooter to a full-sized motorcycle. 384 pages in soft cover.

NOTE: ALL PRICES ARE PLUS P&P – AUSTRALIA ONLY: $10.00 per order; NZ – $12.00 PER BOOK; REST OF WORLD $18.00 PER BOOK

To Place Your Order:	eMAIL (24/7)	OR	FAX (24/7)	OR	PAYPAL (24/7)	OR	PHONE - (9-5, Mon-Fri)	OR	MAIL
	silicon@siliconchip.com.au with order & credit card details		Your order and card details to (02) 9939 2648 with all details		Use your PayPal account silicon@siliconchip.com.au		Call (02) 9939 3295 with order & credit card details		Your order to PO Box 139 Collaroy NSW 2097

Or use the handy order form on P105 of this issue

*ALL TITLES SUBJECT TO AVAILABILITY. PRICES VALID FOR MONTH OF MAGAZINE ISSUE ONLY. ALL PRICES INCLUDE GST

MARKET CENTRE

Cash in your surplus gear. Advertise it here in SILICON CHIP

SPLat CONTROLS

Tough times demand innovative solutions!

In tough economic times you need to watch every dollar. SPLat embedded controllers give OEMs more functionality per dollar than any competing product. Check out our website today and discover how we can help you remain competitive.

Made in Australia, used by OEMs world-wide

splat-sc.com

Battery Packs & Chargers

Siomar Battery Engineering

www.batterybook.com

Phone (08) 9302 5444

Printed Circuit Board Manufacture

48-Hour service • High quality • Low prices

1 offs to any quantity

Artwork design if required

Call for obligation free quote...

INSTANT PCBs, POBox 448, Avalon 2107

Ph (02)9974 1189 Fax (02)9974 5491

ELNEC IC PROGRAMMERS

High quality
Realistic prices
Free software updates
Large range of adaptors
Windows 95/98/Me/NT/2k/XP

CLEVERSCOPE USB OSCILLOSCOPES

2 x 100MSa/s 10bit inputs + trigger
100MHz bandwidth
8 x digital inputs
4M samples/input
Sig-gen + spectrum analyser
Windows 98/Me/NT/2k/XP

IMAGECRAFT C COMPILERS

ANSI C compilers, Windows IDE
AVR, TMS430, ARM7/ARM9
68HC08, 68HC11, 68HC12

GRANTRONICS PTY LTD

www.grantronics.com.au

FOR SALE

questronix.com.au – audiovisual experts solve home, corporate security and devotional installation & editing woes. QuestAV CYP, Kramer TVone (02) 4343 1970 or **sales@questronix.com.au**

LEDs! Nichia, Cree and other brand name LEDs at excellent prices. LED drivers, including ultra-reliable linear driver options. Many other interesting and hard-to-find electronic items! **www.ledsales.com.au**

PCBs MADE, ONE OR MANY. Any format, hobbyists welcome. Sesame Electronics Phone (02) 8068 2713. **sesame@sesame.com.au** **www.sesame.com.au**

PCBs & Micros: Silicon Chip Publications can supply PCBs and programmed micros for all recent (and some not so recent) projects described in the magazine. See the SILICON CHIP PartShop advert in this issue. Phone (02) 9939 3295 or email **silicon@siliconchip.com.au**

KIT ASSEMBLY & REPAIR

KEITH RIPPON KIT ASSEMBLY & REPAIR:

* Australia & New Zealand;
* Small production runs.

Phone Keith 0409 662 794. **keith.rippon@gmail.com**

WANTED

CUSTOMERS WANTED: Truscotts Electronic World – large range of semiconductors and passive components for industry, hobbyist and amateur projects including Drew Diamond. 27 The Mall, South Croydon, Melbourne. Phone (03) 9723 3860. **www.electronicworld.com.au**

Issues Getting Dog-Eared?

Keep your copies of SILICON CHIP safe with these handy binders

Available Aust. only. Price: $A14.95 plus $10 p&p per order (includes GST). Just fill in and mail the handy order form in this issue; or fax (02) 9939 2648; or call (02) 9939 3295 and quote your credit card number.

ADVERTISING IN MARKET CENTRE

Classified Ad Rates: $29.50 (incl. GST) for up to 20 words plus 85 cents for each additional word. Display ads: $54.50 (incl. GST) per column centimetre (max. 10cm).

Closing date: 5 weeks prior to month of sale. To book, email the text to **silicon@siliconchip.com.au** and include your name, address & credit card details, or fax (02) 9939 2648, or phone (02) 9939 3295.

RFMA RF Modules Australia
Low Power Wireless Connectivity Specialists

USB BLUETOOTH
PARANI UD100-G01
Class 1 Bluetooth 2.0+EDR
Working distance to 300m
Toshiba or BlueSoleil driver
Optional 5dBi Dipole Antenna

Applications:
Rural
Utilities
Industrial
Commercial
Government
Meter Reading

CONNECT TO YOUR SOLAR INVERTER THE EASY WAY!

RF Modules Australia. P.O. Box 1957 Launceston, TAS., 7250.
Ph: 03-6331-6789. Email: sales@rfmodules.com.au. Web: rfmodules.com.au

Ask SILICON CHIP

. . . continued from p109

and connected in series. However, the Hearing Loop Receiver is generally used upright and so there is no need for an alternative orientation inductor for pick-up from the horizontal loop.

Using the SoftStarter in the USA

Can the SoftStarter be used in the USA with 125VAC mains? (H. E., via email).

● We are not sure sure whether you are referring to the SoftStarter for devices like computers, in the April 2012 issue or the SoftStarter for power tools, in the July 2012 issue. In both cases the circuits should work with 125VAC mains but it will be necessary to double the size of the 330nF supply capacitor, to ensure that the relay operates properly.

Headphone socket for a Fender guitar amplifier

I recently purchased a 15W Fender guitar amplifier and now want to fit a headphone jack to it. Can I disconnect the speaker wires completely and fit a resistor in series with the headphone wiring and drive the headphones that way or do I have to use some type of resistor-capacitor network?

Any suggestions would be much appreciated. (C. D., via email).

● The first question which must be asked is "Is it a valve amplifier?" If so, then you must always have a resistor to substitute for the loudspeaker resistance.

For example, if the loudspeaker is 15Ω or 16Ω, you can probably get away with a 22Ω 5W wirewound resistor. Then you need a series resistor to the headphones to reduce the volume level. A 1kΩ 1W resistor should be suitable for 32Ω headphones. The left and right headphones can be wired in parallel.

If the amplifier is solid state, then you can dispense with the need for the 22Ω 5W dummy load resistor. SC

DOWNLOAD OUR CATALOG AT
www.iinet.net.au/~worcom
WORLDWIDE ELECTRONIC COMPONENTS
PO Box 631, Hillarys, WA 6923
Ph: (08) 9307 7305 Fax: (08) 9307 7309
Email: worcom@iinet.net.au

Notes & Errata

Induction-Motor Speed Controller, May 2012: a number of changes must be made to the original PCB to ensure reliable operation. These changes are described on page 80 of this issue. In addition, one of the holes is incorrectly positioned on the heatsink drilling diagram. A corrected drilling diagram is shown on page 83.

Barking Dog Blaster (September 2012): the 10Ω resistor shown on the overlay and PCB screen print to the right of the S2 start switch terminals should be a 100Ω resistor to match the parts list and circuit.

High-Power Class-D Audio Amplifier (November 2012): the two 3/8-inch x 20mm-long machine screws listed in the parts list (to secure the heatsink to the PCB) should be 3/16-inch x 20mm.

Advertising Index

ADM Instrument Engineering 5
Altronics 76-79
Apex Tool Group 17
Circuit Labs Ltd 9
Cleverscope 89
element14 ..... insert,63
Emona Instruments 65
Gooligum Electronics 88
Grantronics 111
Harbuch Electronics 107
Hare & Forbes ..... OBC
HK Wentworth 21
IMP Printed Circuits 42
Instant PCBs 111
Jaycar IFC,53-60
Jimojo 88
Keith Rippon 111
Kitstop 88
LED Sales 111
Linkwell 9
Mastercut 22
Matrix Multimedia 8
Microchip Technology 35
Mikroelektronika ..... IBC
Mektronics 23
Mouser Electronics 3
Oatley Electronics 89
Ocean Controls 103
Ozcommfile 89
Prime Electronics 20
Quest Electronics 111
Radio, TV & Hobbies DVD 109
RF Modules 112
Sesame Electronics 111
Silicon Chip Binders 102,111
Silicon Chip Bookshop 110
Silicon Chip Order Form 105
Silicon Chip Partshop 104
Silicon Chip Subscriptions 87
Siomar Battery Engineering 111
Splat Controls 111
Tekmark Australia 88
Telelink 89
Tenrod Pty Ltd 43
Trio Smartcal 4
Truscotts Electronic World 111
Upton Australia 19
Wiltronics 6,7
Worldwide Elect. Components .. 112

one SOCKET

for click ALL boards

Just place the **Click™** board you need into the innovative new **mikroBUS™** socket and it's ready to work right away.

MikroElektronika
DEVELOPMENT TOOLS | COMPILERS | BOOKS

www.libstock.com

GET IT NOW
www.mikroe.com

NOTE: Two 2x8 male headers are included in the package with each click board.

2012 Christmas Specials

Re-Threading Tap & Die Kit

- 42 piece (Metric, UNC & UNF)
- All re-thread taps & dies are hex shaped for use with a socket or wrench
- Contents: covering all M6-M12, 1/4"-5/8" coarse & fine thread
- Includes 2 thread files

$89 (T020)

Thread Repair Kit

- Metric (M5 x 0.8mm, M6 x 1.0mm, M8 x 1.25mm, M10 x 1.5mm, M12 x 1.75mm)
- 130 pieces set

$149 (T100)

GSP-795 Pneumatic Round Stool

- Ø360mm seat
- 795mm maximum seat height
- Chrome plated steel frame with footrest
- Non slip rubber feet

NEW RELEASE $89 (A359)

Centre Punch Set

- 3 piece set
- 2.5, 5.5, 7.0mm
- 150mm length
- Knurled body for a firm safe grip

NEW RELEASE $18 (P367)

Steel Rules

- Metric one side / Imperial on the other side
- Rust & wear resistant for durability
- Made of hardened & tempered stainless steel with satin chrome finish

150mm/6" $6 (C620)

300mm/12" $12 (C621)

600mm/24" $18 (C622)

Digital Outside Micrometer

- 0-25mm/0-1" range
- ±0.002mm accuracy
- 0.001mm/0.005" resolution
- Metric/Imperial conversion & zero setting keys
- Large LCD screen for easy reading

NEW RELEASE $79 (C124)

RFM-900 Rubber Mat

- 910 x 910mm (10mm thick)
- Ideal for the workshop
- Clips together for desired size

$35 EACH (M905)

BUY 2 OR MORE FOR $30 EACH

Feeler Gauge

- 0.03-1.0mm thickness range
- High grade tool steel
- Hardened tempered & polished

$16 (C616)

SBD-20B Bench Drill

- 16 spindle speeds
- 2MT spindle taper
- 16mm drill capacity
- 170mm throat depth
- Table rotates 360°
- 1hp 240V motor

$279 (D138)

FREE 100mm DRILL PRESS VICE (V124) VALUED AT $22

RAV2.75/36 Air Compressor

- 36 litre tank
- 2.75hp motor
- 205 L/min free air delivery
- V-Twin pump

$399 (C327)

Engineers Files

- 250mm length files
- Manufactured to Hi-Quality from hardened & tempered carbon steel
- Cushion grip handle

TYPE	GRADE	
Flat	Coarse	(F120)
Flat	Second Cut	(F121)
Flat	Smooth	(F122)
Half Round	Coarse	(F124)
Half Round	Second Cut	(F125)
Half Round	Smooth	(F126)
Round	Coarse	(F127)
Round	Second Cut	(F128)
Round	Smooth	(F129)

$12 EACH

HM-10 Mini Mill Drill

- Dovetail column
- 2 speed gearbox
- Head tilts ±45°
- 350W motor
- Travels: (X) 225mm (Y) 100mm (Z) 190mm

$789 (M150)

AL-30 Bench Lathe

- 180 x 300mm turning capacity
- 20mm spindle bore
- Metric screw cutting capable
- 0-2000rpm variable speeds
- 0.25kW / 0.33hp 240V motor
- High / low speed gear lever
- Includes 5 piece turning tool kit

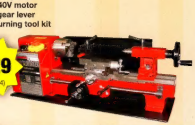

$729 (L194)

ORDER NOW!

USE PROMO CODE: SEASONEND TO RECEIVE THESE SPECIAL PRICES ONLINE OR INSTORE! Valid until 31-12-12

Specifications & Prices are subject to change without notification. All prices include GST and valid until 31-12-12

HARE & FORBES MACHINERY HOUSE

NSW	QLD	VIC	WA
(02) 9890 9111	(07) 3274 4222	(03) 9212 4422	(08) 9373 9999
1/2 Windsor Rd, Northmead	626 Boundary Rd, Coopers Plains	1 Fowler Rd, Dandenong	41-43 Abernethy Rd, Belmont

www.machineryhouse.com.au

13_SC_2012